SAFETY INSTRUCTIONS

1. WARNING! Ensure all Health and Safety practices are strictly adhered to when using this product.
2. Compression tests on diesel engines should be conducted when the engine is cold.
3. Use proper ventilation and avoid breathing in exhaust fumes.
4. Keep a fire extinguisher to hand
5. Fuel delivery must be prevented by either operating the engine stop lever or disconnecting fuel pump solenoid.
6. Ensure you keep tester at arms length when relieving pressure to avoid personal injury.
7. Protect your hands from burns as quick release coupling and adaptors may become hot during use.
8. Account for all the tools and parts being used and do not leave them in, on or near the engine after use.
9. DO NOT remove the compression test equipment while engine is being cranked.
10. Maintain tools in good and clean condition for best and safest performance.
11. DO NOT use test kit if damaged. Wear suitable clothing to avoid snagging.
12. DO NOT wear jewellery and tie back long hair.

5 018341 045104 >

TOOL CONNECTION
The Complete Connection

Distributed by The Tool Connection Ltd

Kineton Road, Southam, Warwickshire CV47 0DR
T +44 (0) 1926 815000 **F** +44 (0) 1926 815888
info@toolconnection.co.uk **www.toolconnection.co.uk**

Guarantee

If this product fails through faulty materials or workmanship, contact our service department direct on: **+44 (0) 1926 818186**. Normal wear and tear are excluded as are consumable items and abuse.

4510

LASER®

Diesel Engine Compression Tester Kit

Instructions

www.lasertools.co.uk

Copyright Laser Tools

Diesel Engine Compression Tester Kit

This comprehensive Diesel Engine Compression Tester kit covers a vast majority of modern engines fitted to most manufacturers' vehicles.
A large 2.5 gauge with 0-70 kg/cm^2 or 0-1000psi coiled rubber hose with right angled connection and a wide selection of glow plug and injector adaptors in claw and clamp on application.

Instructions

1. Select the appropriate dummy glow plug or injector adaptor
2. Remove the glow plug and replace
3. Connect the Tester with the quick coupler
4. Crank the engine and observe the gauge.
5. When the maximum has been reached, stop cranking
6. Note down the reading
7. Depress the Re-test valve to relieve pressure (take care as the pressure released is high)
8. Repeat test until all cylinders have been tested
9. Compare readings and consult workshop manual for diagnostics.

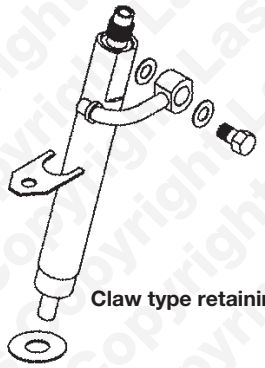

Claw type retaining clamp

Clamp type injector

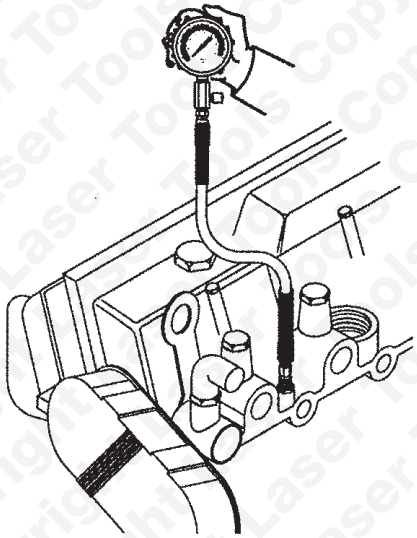

Applications

VOLKSWAGEN	TRANSPORTER T4	1.9	T4	1X	90 TO 95	M12X1.25	1
VOLKSWAGEN	TRANSPORTER T4	1.9	T4	ABL	92 TO 02	M12X1.25	1
VOLKSWAGEN	TRANSPORTER T4	2.4	T4	AAB, AJA	92 TO 03	M12X1.25	1
VOLKSWAGEN	SHARAN 1	2.5	T4	ACV	97 TO 03	M10X1.0	12
VOLKSWAGEN	SHARAN 1	2.5	T4	AHY, AJT, AUF,AYC,AYY	98 TO 03	M10X1.0	12
VOLKSWAGEN	TRANSPORTER T5	1.9	85-105	AXB, AXC	03 ON	M10X1.0	13
VOLKSWAGEN	TRANSPORTER T5	2.5	T5 130-174	AXD, AXE	03 ON	M10X1.0	13
VOLKSWAGEN	VENTO	1.9	TD	1Y, AAZ	92 TO 98	M12X1.25	1
VOLKSWAGEN	SHARAN 1	1.9	TDI	1Z, AHU, AFN, AJM	94 ON	M10X1.0	12
VOLVO	200 SERIES				TO 81	M12X1.25	2
VOLVO	200 SERIES				81 ON	M12X1.25	1
VOLVO	340				84 ON	M12X1.25	1
VOLVO	360				84 ON	M12X1.25	1
VOLVO	440	1.9	TURBO	F8Q TURBO	94 TO 97	M12X1.25	2
VOLVO	460	1.9	TURBO	D 19 T	94 TO 97	M12X1.25	2
VOLVO	740			D24, D24T	84 TO 91	M12X1.25	1
VOLVO	760			D24, D24T	84 TO 91	M12X1.25	1
VOLVO	850		TURBO	D5252 (Audi)	95 TO 97	M10X1.0	12
VOLVO	940		TURBO	D24T	90 TO 96	M12X1.25	1
VOLVO	S40	1.9	TURBO	D4192T F8Q (Renault)	96 TO 99	M12X1.25	2
VOLVO	S40	1.9	DI	D4192T 2 F9Q (Renault)	99 TO 00	M10X1.0	12
VOLVO	850	1.9	TURBO Direct Injection	dCi (Renault)	00 ON	M10X1.0	12
VOLVO	S40	1.6			04 ON	M8X1.0	21
VOLVO	S70	2.5	TDi/D	D5252T	96 TO 00	M10X1.0	12
VOLVO	S70	2.5	TURBO	D5252T	98 ON	M10X1.0	12
VOLVO	V40	1.9	TURBO	D4192T F8Q (Renault)	96 TO 99	M12X1.25	2
VOLVO	V40	1.9	DI	D4192T 2 F9Q (Renault)	99 TO 00	M10X1.0	12
VOLVO	S70	1.9		dCi Renault	00 ON	M10X1.0	12
VOLVO	V50	2.0		D4204T	04 ON	M10X1.0	18
VOLVO	S70	2.5	TURBO	D5252T	97 TO 01	M10X1.0	12

Copyright Laser Tools

Applications

VAUXHALL	NOVA TD	1.5	TURBO	T4EC1-AADT	88 TO 93	M10X1.25	11
VAUXHALL	OMEGA	2.0		X20DTH, X20DTL	98 ON	M10X1.0	16
VAUXHALL	OMEGA	2.0		Y20DTH	00 ON	M10X1.25	9
VAUXHALL	OMEGA	2.2		Y22DTR	00 ON	M10X1.25	9
VAUXHALL	OMEGA	2.5	TURBO		94 ON	M12X1.25	1
VAUXHALL	SIGNUM	2.0		Y20DTH	03 ON	M10X1.25	9
VAUXHALL	SIGNUM	2.2		Y22DTR	03 ON	M10X1.25	9
VAUXHALL	SINTRA	2.2		X22DTH, X22DTL	98 TO 99	M10X1.0	16
VAUXHALL	TIGRA	1.3		Z13DT	04 ON	M8X1.0	21
VAUXHALL	VECTRA B	1.7		X17TD/TC4 EE1	95 TO 96	M10X1.25	11
VAUXHALL	VECTRA B	1.7		X17TD/TC4 EE1	95 TO 96	M10X1.25	11
VAUXHALL	VECTRA B	2.0		X20DTL	96 TO 97	M10X1.0	16
VAUXHALL	VECTRA B	2.0		X20DTH, X20DTL	98 ON	M10X1.0	16
VAUXHALL	VECTRA B	2.0		Y20DTH	00 ON	M10X1.25	9
VAUXHALL	VECTRA B	2.2		Y22DTR	00 ON	M10X1.25	9
VAUXHALL	VECTRA C	1.9	CDTi 8 Valve	Z19DT	04 ON	M10X1.0	15
VAUXHALL	VECTRA C	2.0		Y20DTH	02 TO 06	M10X1.25	9
VAUXHALL	VECTRA C	2.2		Y22DTR	02 ON	M10X1.25	9
VAUXHALL	VIVARO	1.9	DTi	F9Q770	01 ON	M10X1.0	12
VAUXHALL	VIVARO	2.5			03 ON	M10X1.0	20
VAUXHALL	ZAFIRA	2.0		X20DTH, X20DTL	99 TO 00	M10X1.0	16
VAUXHALL	ZAFIRA	2.0		Y20DTH	00 ON	M10X1.25	9
VAUXHALL	ZAFIRA	1.9	CDTi 8	Z19DT	05 ON	M10X1.0	15
VOLKSWAGEN	ALL DIESEL	All			TO 80	M12X1.25	2
VOLKSWAGEN	ALL DIESEL (80→93)	All			80 TO 93	M12X1.25	1
VOLKSWAGEN	BORA	1.9		AGP, AGR, AHF, AJM, ALH	99 ON	M10X1.0	12
VOLKSWAGEN	BORA	1.9		ANU, AQM, ASV, AUY	99 ON	M10X1.0	12
VOLKSWAGEN	BORA	1.9	UP TO CHASSIS. 1J-2-600000	ARL, ASZ, ATD, AXR	00 ON	M10X1.0	12
VOLKSWAGEN	BORA	1.9	FROM CHASSIS. 1J-2-600000	ARL, ASZ, ATD, AXR	00 ON	M10X1.0	13
VOLKSWAGEN	BEETLE	1.9		ALH, ATD	00 ON	M10X1.0	12
VOLKSWAGEN	CADDY Mk1	1.6		JK, ME	82 TO 96	M12X1.25	1
VOLKSWAGEN	CADDY Mk2	1.9		1Y, AEF	96 ON	M12X1.25	1
VOLKSWAGEN	BEETLE	1.9	Sdi	AEY,AGD,AHU,ALE,ALH,AYQ	96 ON	M10X1.0	12
VOLKSWAGEN	CADDY Mk3	2.0		BDJ, BST	04 ON	M10X1.0	13
VOLKSWAGEN	GOLF Mk2 (84→91)	1.6	All Engine Codes	1V,CK,CR,CY,JK,JP,JR,RA,SB	84 TO 91	M12X1.25	1
VOLKSWAGEN	GOLF Mk3 (91→98)	1.9	NON TURBO	1Y	91 ON	M12X1.25	1
VOLKSWAGEN	BEETLE	1.9	NON TURBO	AEY	95 ON	M10X1.0	12
VOLKSWAGEN	BEETLE	1.9	75bhp / 55kW TD	AAZ	91 ON	M12X1.25	1
VOLKSWAGEN	BEETLE	1.9	Incl. TDI	1Z, AFN, AHU,ALE	93 ON	M10X1.0	12
VOLKSWAGEN	GOLF Mk4	1.9		AGP, AGR, AHF, AJM, ALH	97 ON	M10X1.0	12
VOLKSWAGEN	GOLF Mk4	1.9		ANU, AQM, ASV, AUY, AVG	97 ON	M10X1.0	12
VOLKSWAGEN	GOLF Mk4	1.9	UP TO CHASSIS. 1J-2-600000	ARL, ASZ, ATD, AXR	00 ON	M10X1.0	12
VOLKSWAGEN	GOLF Mk4	1.9	FROM CHASSIS. 1J-2-600001	ARL, ASZ, ATD, AXR	00 ON	M10X1.0	13
VOLKSWAGEN	JETTA	1.6	All Engine Codes	1V,CK,CR,CY,JK,JP,JR,RA,SB	84 TO 91	M12X1.25	1
VOLKSWAGEN	LT 1 (_08/96)	2.4	All models	Turbo /Non Turbo	78 TO 96	M12X1.25	1
VOLKSWAGEN	LT 2	2.5	Incl. Sdi	AGX,AHD,ANJ,APA	96 ON	M10X1.0	12
VOLKSWAGEN	LT 2	2.5		AVR,BBE,BBF	96 ON	M10X1.0	12
VOLKSWAGEN	LUPO	1.4	UP TO CHASSIS 6X-2-005 000	AMF	00 ON	M10X1.0	12
VOLKSWAGEN	LUPO	1.4	FORM CHASSIS 6X-2-005 001	AMF	00 ON	M10X1.0	13
VOLKSWAGEN	LUPO	1.7		AKU	99 ON	M10X1.0	12
VOLKSWAGEN	PASSAT	1.6	Incl. TURBO	CR,CY,JK,RA,SB	84 TO 93	M12X1.25	1
VOLKSWAGEN	PASSAT	1.9	Incl. TURBO	1Y, AAZ	89 TO 96	M12X1.25	1
VOLKSWAGEN	LUPO	1.9	TURBO	1Z, AFN, AJM, AHU	89 ON	M10X1.0	12
VOLKSWAGEN	PASSAT	1.9	TURBO	AFN,AHH,AHU,AJM,AYJ,AUG	96 ON	M10X1.0	12
VOLKSWAGEN	PASSAT	2.5	V6 TDI	AFB, AKN	98 ON	M10X1.0	17
VOLKSWAGEN	PASSAT	1.9	UP TO CHASSIS. 3B-2-350-000	AVB, AVF, ATJ, AWX	00 ON	M10X1.0	12
VOLKSWAGEN	PASSAT	1.9	FROM CHASSIS 3B-2-350-001	AVB, AVF, AWX	00 ON	M10X1.0	13
VOLKSWAGEN	PASSAT	2.5	V6 TDI	AFB,AKN,BAU,BDG,BDH	00 ON	M10X1.0	17
VOLKSWAGEN	PHAETON	5.0		AJS	03 ON	M10X1.0	13
VOLKSWAGEN	POLO Mk4	1.9	64bhp / 47kW	AEF	96 ON	M12X1.25	1
VOLKSWAGEN	PASSAT	1.9		AEY, AHU	95 TO 99	M10X1.0	12
VOLKSWAGEN	POLO Mk5	1.4		AMF	00 ON	M10X1.0	12
VOLKSWAGEN	POLO Mk5	1.9		ASX	99 ON	M10X1.0	12
VOLKSWAGEN	POLO Mk6	1.4		BAY	02 ON	M10X1.0	12
VOLKSWAGEN	POLO Mk6	1.9	SDi	ASY	02 ON	M10X1.0	13
VOLKSWAGEN	POLO Mk6	1.9	TDi	ATD, AXR, BLT	02 ON	M10X1.0	13
VOLKSWAGEN	SHARAN 1	1.9		1Z, AHU, AFN, AVG	95 TO 00	M10X1.0	12
VOLKSWAGEN	SHARAN 1	1.9	UP TO CHASSIS. 7M-2-030-004	ANU, AUY	99 ON	M10X1.0	12
VOLKSWAGEN	SHARAN 1/2	1.9	FROM. 7M-2-030-004	ANU, AUY	99 ON	M10X1.0	13
VOLKSWAGEN	SHARAN 2	1.9		ASZ, BVK	00 ON	M10X1.0	13
VOLKSWAGEN	TOUAREG	2.5		BAC, BLK	03 TO 06	M10X1.0	13
VOLKSWAGEN	TOUAREG	5.0		AYH	03 TO 06	M10X1.0	13
VOLKSWAGEN	TRANSPORTER T3	1.6	T3		81 TO 90	M12X1.25	1
VOLKSWAGEN	TRANSPORTER T3	1.7	T3	KY	86 TO 90	M12X1.25	1

Contents

- 0-1000 psi (0-70 kg/cm²) 2 ½ Gauge with rubber bumper
- 90° Adaptor
- 20 x Dummy Glow plugs
- 5 x Injector Adaptors
- 2 x Packs Spare Seals | Washers and nozzle
- 1 x Clamp and Claw Adaptor Set
  Six clamp-on injector adaptors suitable for Car | Van | Truck | Bus | Agricultural & Marine injector sizes. Suitable for use where injector is held in place by clamp | claw | bridge. Collar system allows easy matching of injector profile.
- Full application list clamp | claw | bridge.
  Collar system allows easy matching of injector profile.
- Full application list

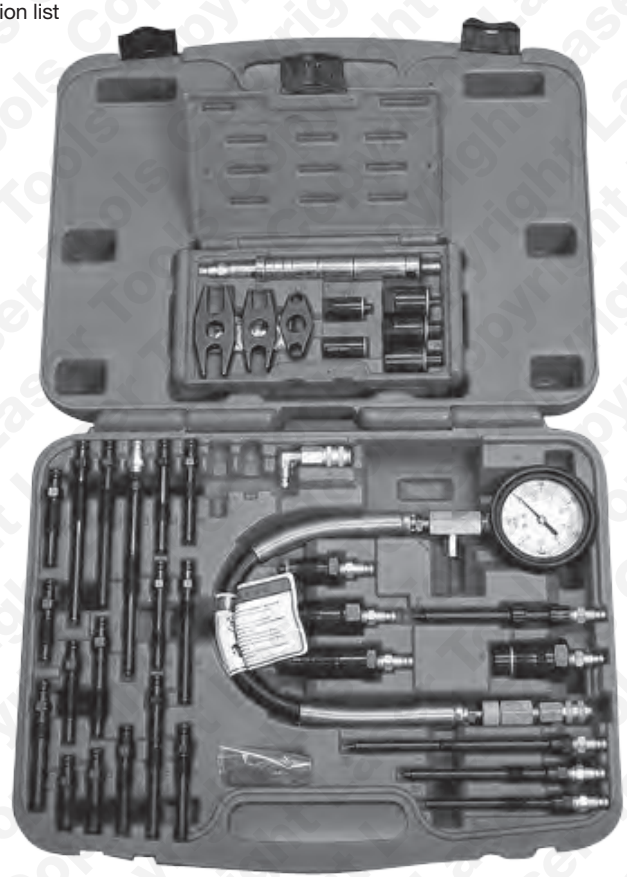

Dummy injector simulating a clamp-type injector

1. Pillar bridge piece
2. Cylinder Head
3. Sealing Washer
4. Spacers
5. Nozzle Adaptors

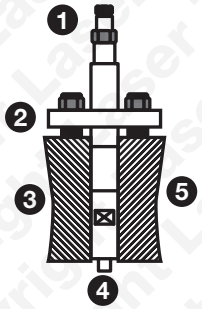

1. Pillar
2. Engine Manufacturer's injector Clamp (claw)
3. Spacers
4. Cylinder Head
5. Nozzle Adaptors
6. Sealing Washer

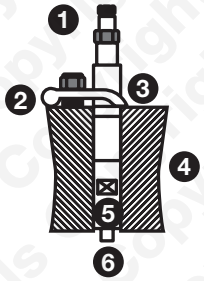

Claw held injectors - use the actual injectors clamp

NOTE: Use large diameter spacer in top position for wider claws

With the appropriate Nozzle Adaptor screwed to the Pillar Assembly and with Spacers and Bridge piece added you can duplicate the profile of the original injector.
IMPORTANT: Depth (X) not to exceed depth (Y)

1. Bridge piece
2. Spacers
3. Nozzle Adaptors
4. Original injector

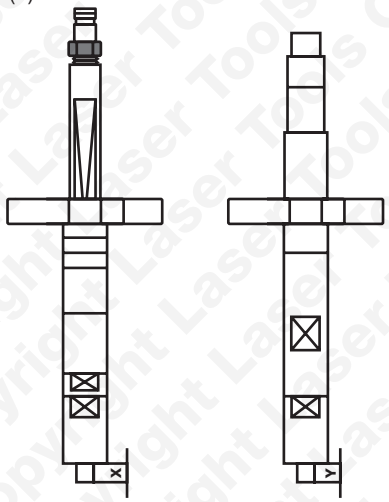

Applications

TOYOTA	HI-LUX	2.4		2L	91 ON	M10X1.25	7
TOYOTA	HI-LUX	2.4	TURBO	2L-T	97 ON	M10X1.25	7
TOYOTA	HI-LUX	2.5	TURBO	2KDFTV	01 ON	M10X1.25	10
TOYOTA	LANDCRUISER	3.0	D-4D	1KD-FTV	03 ON	M10X1.25	10
TOYOTA	LANDCRUISER	4.0		2H	TO 82	M10X1.25	4
TOYOTA	LANDCRUISER	4.0		2H	82 ON	M10X1.25	4
TOYOTA	LANDCRUISER	4.2		1HD-T	95 TO 96	M10X1.25	9
TOYOTA	LANDCRUISER	4.2	AMAZON	1HD-T	97 TO 98	M10X1.25	9
TOYOTA	PREVIA	2.0	D-4D	1CD-FTV	01 ON	M10X1.25	10
TOYOTA	RAV 4 Mk2	2.0	D-4D	1CD-FTV	01 ON	M10X1.25	10
VAUXHALL	ARENA	1.9		F8Q 600, F8Q 606	98 TO 00	M10X1.0	13
VAUXHALL	ARENA	2.5		S8U 758	97 TO 00	M12X1.25	1
VAUXHALL	ASTRA	1.6			87 TO 88	M12X1.25	1
VAUXHALL	ASTRA	1.7	NON TURBO	GM (Vauxhall Engine)	89 TO 91	M12X1.25	1
VAUXHALL	ASTRA	1.7	TURBO	GM (Vauxhall Engine)	89 TO 91	M12X1.25	1
VAUXHALL	ASTRA	1.7	1.7D & 1.7DTL	GM (Vauxhall Engine)	92 TO 97	M12X1.25	1
VAUXHALL	ASTRA	1.7	TD	TC4EE1	92 TO 97	M10X1.25	11
VAUXHALL	ASTRA	1.7	TD	TC4EE1	92 TO97	M10X1.25	11
VAUXHALL	ASTRA	1.7	TD	TC4EE1	92 TO 97	M10X1.25	11
VAUXHALL	ASTRA G	1.7	TD 8 VALVE	X17DTL	98 TO 00	M12X1.25	1
VAUXHALL	ASTRA G	1.7	16 VALVE	Y17DT	00 ON	M10X1.25	9
VAUXHALL	ASTRA G	2.0	DI & DTI	X20DTH, X20DTL	98 ON	M10X1.0	16
VAUXHALL	ASTRA G	2.0		Y20DTH	00 ON	M10X1.25	9
VAUXHALL	ASTRA H	1.3		Z13DT	05 ON	M8X1.0	21
VAUXHALL	ASTRA H	1.7	16 VALVE	Z17DTH, Z17DTL	04 ON	M10X1.25	9
VAUXHALL	ASTRAMAX	1.6			85 TO 89	M12X1.25	1
VAUXHALL	ASTRAMAX	1.7			89 TO 94	M12X1.25	1
VAUXHALL	ASTRAVAN	1.7	1.7D & 1.7DTL		92 TO 97	M12X1.25	1
VAUXHALL	ASTRAVAN	1.7	TD 8 VALVE ONLY	GM (Vauxhall Engine)	98 TO 00	M12X1.25	1
VAUXHALL	ASTRAVAN	1.7	16 VALVE	Isuzu	00 ON	M10X1.25	9
VAUXHALL	ASTRAVAN	2.0	DI & DTI	X20DTH, X20DTL	98 ON	M10X1.0	16
VAUXHALL	ASTRAVAN	2.0		Y20DTH	00 ON	M10X1.25	9
VAUXHALL	BELMONT	1.6			86 TO 89	M12X1.25	1
VAUXHALL	BELMONT	1.7	NON TURBO	GM (Vauxhall Engine)		M12X1.25	1
VAUXHALL	BRAVA	2.2			88 TO 90	M10X1.25	4
VAUXHALL	CARLTON	1.6				M12X1.25	1
VAUXHALL	CARLTON	2.3				M12X1.25	1
VAUXHALL	CAVALIER	1.6			87 TO 88	M12X1.25	1
VAUXHALL	CAVALIER	1.7	NON TURBO ONLY	GM (Vauxhall Engine)	89 ON	M12X1.25	1
VAUXHALL	CAVALIER	1.7	TURBO	TC4EC1	92 TO 95	M10X1.25	4 OR 11
VAUXHALL	COMBO	1.3		Z13DT, Z13DTJ	04 ON	M8X1.0	21
VAUXHALL	COMBO	1.7		X17DTL	92 TO 01	M10X1.25	11
VAUXHALL	COMBO	1.7		X17DTL	92 TO 01	M10X1.25	11
VAUXHALL	COMBO	1.7	16V	Y17DT, Y17DTL, Z17DTH	00 ON	M10X1.25	9
VAUXHALL	CORSA B	1.5		15D, 15DT	93 TO 00	M10X1.25	11
VAUXHALL	CORSA B	1.5		15D, 15DT	93 TO 00	M10X1.25	11
VAUXHALL	CORSA B	1.7	8V	X17D	94 TO 00	M10X1.25	11
VAUXHALL	CORSA B	1.7	8V	X17D	94 TO 00	M10X1.25	11
VAUXHALL	CORSA C	1.3		Z13DT, Z13DTJ	03 ON	M8X1.0	21
VAUXHALL	CORSA C	1.7	16 VALVE	Y17DT, Y17DTL, Z17DTH	00 ON	M10X1.25	9
VAUXHALL	CORSA D	1.3	16 Valve 75PS & 90PS	Z13DT	06 ON	M8X1.0	21
VAUXHALL	CORSAVAN	1.3		Z13DT	04 ON	M8X1.0	21
VAUXHALL	CORSAVAN	1.7	8V	X17D	94 TO 01	M10X1.25	11
VAUXHALL	CORSAVAN	1.7	8V	X17D	94 TO 01	M10X1.25	11
VAUXHALL	CORSAVAN	1.7	16V	Y17DT, Y17DTL	00 ON	M10X1.25	9
VAUXHALL	FRONTERA A	2.3		TURBO	91 TO 95	M12X1.25	1
VAUXHALL	FRONTERA A	2.5		25TD/TDS - VM41B	96 TO 98	M10X1.0	13
VAUXHALL	FRONTERA B	2.2	DTI	X22DTH, X22DTL	98 ON	M10X1.0	16
VAUXHALL	FRONTERA B	2.2		Y22DTH	00 ON	M10X1.25	9
VAUXHALL	MERIVA	1.3		Z13DT, Z13DTJ	05 ON	M8X1.0	21
VAUXHALL	MERIVA	1.7	16 Valve 75PS & 100PS	Y17DT, Z17DTH	03 TO 06	M10X1.25	9
VAUXHALL	MERIVA	1.7	16 Valve 125PS	Z17DTR	06 ON	M8X1.0	21
VAUXHALL	MIDI	2.0		Isuzu	88 TO 94	M10X1.25	11
VAUXHALL	MIDI	2		Isuzu	88 TO 94	M10X1.25	11
VAUXHALL	MIDI	2.2		Isuzu	88 TO 94	M10X1.25	11
VAUXHALL	MIDI	2.2		Isuzu	88 TO 94	M10X1.25	11
VAUXHALL	MONTEREY	3.1	TURBO	4JG2	94 TO 99	M10X1.25	6
VAUXHALL	MOVANO	1.9		F9Q 770	01 ON	M10X1.0	12
VAUXHALL	MOVANO	2.2		G9T 720	00 ON	M10X1.0	20
VAUXHALL	MOVANO	2.5		S8U W7	98 ON	M12X1.25	1
VAUXHALL	MOVANO	2.5	CDTI		02 ON	M10X1.0	20
VAUXHALL	NOVA	1.5		15D/CEC1	92 TO 93	M10X1.25	4 OR 11
VAUXHALL	NOVA	1.5		15 D/C EC1 AAD	97 TO 93	M10X1.25	4 OR 11
VAUXHALL	NOVA TD	1.5	TURBO	T4EC1-AADT	87 TO 93	M10X1.25	11

Copyright Laser Tools

Applications

SEAT	IBIZA 1&2	1.7			87 TO 93	M12X1.25	1
SEAT	IBIZA 1&2	1.9	Incl. TURBO	1Y, AAZ	93 ON	M12X1.25	1
SEAT	ALHAMBRA 2	1.9	SDi	AEY, AGP, AQM	99 ON	M10X1.0	12
SEAT	ALHAMBRA 2	1.9	TDi	1Z,AFH,AFN,AGR,AHU,ASV	96 ON	M10X1.0	12
SEAT	IBIZA 3&4	1.4		AMF	03 ON	M10X1.0	13
SEAT	ALHAMBRA 2	1.9	SDi	AGP, AQM	99 TO 03	M10X1.0	12
SEAT	ALHAMBRA 2	1.9	TDi	AGR,ALH,ALK,ASK,ASV	99 TO 02	M10X1.0	12
SEAT	ALHAMBRA 2	1.9	SDi	ASY	02 ON	M10X1.0	13
SEAT	ALHAMBRA 2	1.9	TDi	ATD	02 ON	M10X1.0	13
SEAT	ALHAMBRA 2	1.9	TDi 130	ASZ, BLT	03 ON	M10X1.0	13
SEAT	ALHAMBRA 2	1.9	Cupra R	BPX, BUK	04 ON	M10X1.0	13
SEAT	INCA	1.9	TD	1Y	95 ON	M12X1.25	1
SEAT	ALHAMBRA 2	1.9	SDi	AEY, AYQ	95 ON	M10X1.0	12
SEAT	LEON Mk1	1.9		AGR,AHF,ALH,ARL,ASV	00 TO 05	M10X1.0	12
SEAT	TERRA	1.3			90 TO 91	M12X1.25	1
SEAT	TERRA	1.4			90 ON	M12X1.25	1
SEAT	TOLEDO Mk1	1.9		1Y, AAZ	92 ON	M12X1.25	1
SEAT	LEON Mk1	1.9		1Z, AFN, AGR, AHF, AHU, ALH	95 ON	M10X1.0	12
SEAT	TOLEDO Mk2	1.9		AGR,ALH,ARL,AHF,ASV	99 ON	M10X1.0	12
SEAT	TOLEDO Mk2	1.9		ASZ	99 ON	M10X1.0	13
SKODA	FABIA	1.4		AMF, BNV	03 ON	M10X1.0	13
SKODA	TOLEDO Mk2	1.9	SDi	ASY	00 ON	M10X1.0	12
SKODA	TOLEDO Mk2	1.9	TDi UP TO 6Y-2-451087	ATD	00 ON	M10X1.0	12
SKODA	TOLEDO Mk2	1.9	TDi FROM 6Y-2-451088	ATD, AWX, BLT, BSW	03 ON	M10X1.0	13
SKODA	TOLEDO Mk2	1.9	V RS 130bhp	ASZ	03 ON	M10X1.0	13
SKODA	FELICIA	1.9	D	Y, AEF	97 TO 01	M12X1.25	1
SKODA	TOLEDO Mk2	1.9	D	AEY	97 TO 01	M10X1.0	12
SKODA	OCTAVIA	1.9	TD / TDi	1Z, AFN, AGR, AHF	98 ON	M10X1.0	12
SKODA	OCTAVIA	1.9	TD / TDi	ALH, ASV, ATD	98 ON	M10X1.0	12
SKODA	OCTAVIA	1.9	SDi	AEY, AGP, AQM	99 ON	M10X1.0	12
SKODA	OCTAVIA	1.9	TDi PD 130bhp	ASZ	03 ON	M10X1.0	13
SKODA	PICK UP	1.9	INCL. CUBE VAN	AEF	96 ON	M12X1.25	1
SKODA	SUPERB	1.9		AVB, AVF, AWX	02 TO 06	M10X1.0	13
SKODA	SUPERB	2.5	V6 TDI	AYM, BDG	02 ON	M10X1.0	17
SMART	CITY-COUPE	0.8		OM 660 DE8LA	98 TO 04	M10X1.25	11
SMART	FORTWO	0.8		OM 660	08 ON	M10X1.25	11
SSANGYONG	KORANDO	2.9		MB-OM 602	96 ON	M12X1.25	1
SSANGYONG	KORANDO	2.9		OM 662	96 ON	M12X1.25	1
SSANGYONG	MUSSO	2.9		MB-OM 602	95 ON	M12X1.25	1
SSANGYONG	REXTON	2.9			03 ON	M12X1.25	1
SUZUKI	GRAND VITARA	2.0	86 BHP		98 TO 01	M10X1.25	6
SUZUKI	GRAND VITARA	2.0	HDi (PSA) ENGINE		01 ON	M10X1.0	18
SUZUKI	IGNIS	1.3	DDiS	Z13DT	03 ON	M8X1.0	21
SUZUKI	JIMNY	1.5		DV4	03 ON	M10X1.0	12
SUZUKI	LIANA	1.4		DV4 8HY	04 ON	M8X1.0	21
SUZUKI	SWIFT	1.3	DDiS	Z13DT	06 ON	M8X1.0	21
SUZUKI	SX4	1.9		D19AA	06 ON	M10X1.0	15
SUZUKI	VITARA	1.9	PANEL VAN	PSA	00 TO 03	M12X1.25	1
SUZUKI	VITARA	2.0	70 BHP	RFL-4	96 TO 98	M10X1.25	6
TALBOT	EXPRESS	1.9				M12X1.25	1
TALBOT	EXPRESS	2.5	DIESEL/TURBO DIESEL			M12X1.25	1
TALBOT	HORIZON	1.9				M12X1.25	1
TAXI	AUSTIN	2.25	FX4, FX4/R		83 ON	M12X1.25	1
TAXI	FAIRWAY	2.7		NISSAN TD27	89 ON	M10X1.25	6
TOYOTA	AVENSIS 1	2.0	TD	2C-TE	97 TO 00	M10X1.25	9
TOYOTA	AVENSIS 1	2.0	D-4D	1CD-FTV	99 TO 03	M10X1.25	10
TOYOTA	AVENSIS 2	2.0	D-4D	1CD-FTV	03 TO 05	M10X1.25	10
TOYOTA	AVENSIS VERSO	2.0	D-4D	1CD-FTV	01 ON	M10X1.25	10
TOYOTA	CAMRY	2.0		2C-T	84 TO 88	M10X1.25	4
TOYOTA	CAMRY	2.0		1C-T	84 TO 88	M10X1.25	4
TOYOTA	CARINA II	2.0		2C	91 TO 92	M10X1.25	4
TOYOTA	CARINA E	2.0		2C	92 TO 96	M10X1.25	4
TOYOTA	CARINA E	2.0	TD	2C-T	96 TO 97	M10X1.25	9
TOYOTA	COROLLA	1.8		1C		M10X1.25	4
TOYOTA	COROLLA	2.0	D	2C-E	91 TO 00	M10X1.25	9
TOYOTA	COROLLA	2.0	D-4D	1CD-FTV	00 ON	M10X1.25	10
TOYOTA	COROLLA VERSO	2.0	D-4D	1CD-FTV	01 ON	M10X1.25	10
TOYOTA	HI-ACE	2.2		L	TO 91	M10X1.25	6
TOYOTA	HI-ACE	2.4		2L	TO 89	M10X1.25	6
TOYOTA	HI-ACE	2.4		2L	TO 89	M10X1.25	6
TOYOTA	HI-ACE	2.4		2L	91 ON	M10X1.25	7
TOYOTA	HI-ACE	2.5	D-4D	2KDFTV	01 ON	M10X1.25	10
TOYOTA	HI-LUX	2.2		L	TO 91	M10X1.25	6
TOYOTA	HI-LUX	2.4		2L	TO 03	M10X1.25	6

Instructions

The following applications list has been compiled for reference only and The Tool Connection strongly advise the user to compare the listed adaptor to the glow plug fitted before attempting to connect to the vehicle.

Special attention should be paid to ensure the thread size and pitch of the adaptor matches that of the glow plug used.

Where the vehicle is not listed please follow the instructions below to identify if an appropriate adaptor is included in the kit.

1. Check the thread diameter and pitch - compare to thread sizing of adaptors
2. Measure from lowest thread of the glow plug to the sealing face of the glow plug - compare as shown.
3. Measure the length of the glow plug from the top of the threads to the sealing face - compare as shown.
4. Measure the length of the glow plug from the top of the threads to just below the top fixing -compare as shown.

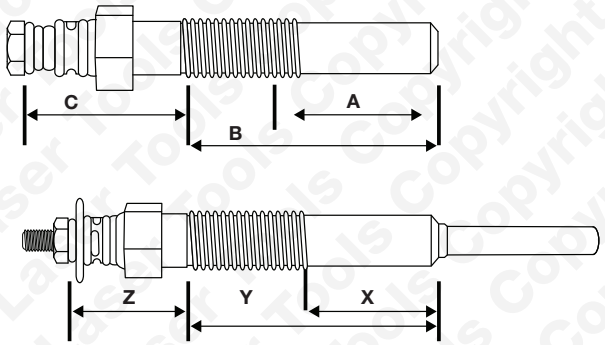

A should be equal to or greater than X

B should be equal to or greater than Y

C should be equal to or greater than Z

Adaptor thread sizing

M12 x 1.25mm = 1, 2 and 3

M10 x 1.25mm = 4, 5, 6, 7, 8, 9, 10 and 11

M10 x 1.0mm = 12, 13, 15, 16, 17, 18, 19 and 20

M8 x 1.0mm = 21

Precautions

- Always disconnect the fuel pump solenoid before cold cranking the engine
- Do not allow the engine to fire whilst connected to the tester
- Always conduct the test when the engine is cold
- Make sure the battery is fully charged when making the test to avoid incorrect readings. Replace appropriate glow plug or injector with dummy or adaptor.

Possible problems

Worn piston rings
If the engine is healthy and the battery fully charged, the compression should build up quickly. Low compression on the first stroke followed by gradual increased pressure indicates worn piston rings

Damaged Head or Head gasket
Low compression on first stroke which does not improve on further strokes indicates a leaking valve or a damaged head or gasket. A low reading from two adjacent cylinders indicates a damaged head gasket Coolant in the engine oil will also confirm this.

Cylinder Head carbonized
The compression will read unusually high. The cylinder head should be decarbonized.

Applications

RENAULT	KANGOO	1.5		K9K 700, K9K 704	02 ON	M10X1.0	12
RENAULT	KANGOO	1.9	D 55, D 65	F8Q 662, F8Q 630	98 ON	M10X1.0	13
RENAULT	KANGOO	1.9		F8Q 632	99 ON	M10X1.0	12
RENAULT	KANGOO	1.9	Dti	F9Q 780	00 ON	M10X1.0	12
RENAULT	KANGOO	1.9	DCI		00 ON	M10X1.0	12
RENAULT	LAGUNA 1	1.9	DTI	F9Q	98 TO 00	M10X1.0	12
RENAULT	ESPACE 2 / GRAND ESPACE	2.2	Incl. TURBO	G8T	905 TO 00	M10X1.0	12
RENAULT	LAGUNA 2	1.9	dCi	F9Q 710, 717, 718	01 ON	M10X1.0	12
RENAULT	LAGUNA 2	1.9	dCi	F9Q C750	01 ON	M10X1.0	12
RENAULT	LAGUNA 2	2.2	dCi	G9T 710	02 ON	M10X1.0	20
RENAULT	MASTER	1.9	dCi, dTi	F9QT-770	01 ON	M10X1.0	12
RENAULT	MASTER	2.2	dCi	F9Q	00 ON	M10X1.0	20
RENAULT	MASTER	2.4		S8U	82 TO 96	M12X1.25	1
RENAULT	MASTER	2.5	D	S8V-748	TO 97	M12X1.25	1
RENAULT	MASTER	2.5	D	S8V-770/772	98 ON	M12X1.25	1
RENAULT	MASTER	2.5	dCi	16S	00 ON	M10X1.0	20
RENAULT	MASTER	2.8	dTi	S9W-700/702	97 ON	M10X1.0	15
RENAULT	MEGANE 1	1.9	TURBO	F8Q-784/786 (12V)	96 ON	M12X1.25	2
RENAULT	MEGANE 1	1.9	NON TURBO	F8Q 620, F8Q 624	96 ON	M12X1.25	1
RENAULT	MEGANE 1	1.9	dTi	F9Q 730	98 ON	M10X1.0	12
RENAULT	MEGANE 1 PHASE 2	1.9	NON TURBO	F8Q 622, 790	99 TO 00	M10X1.0	12
RENAULT	MASTER	1.9	dCi	F9Q 731, 732, 736, 740, 808	00 ON	M10X1.0	12
RENAULT	MASTER	1.9	dTi	F9Q 730, 734	99 ON	M10X1.0	12
RENAULT	MASTER	1.9	dTi	F9QT-770	01 ON	M10X1.0	12
RENAULT	MEGANE 2	1.5	dCi	K9K…	02 ON	M10X1.0	12
RENAULT	MEGANE 2	1.9	dCi	F9Q…	02 ON	M10X1.0	12
RENAULT	MEGANE SCENIC	1.9	DT	F8Q 784, F8Q 786	97 TO 99	M12X1.25	2
RENAULT	MEGANE SCENIC	1.9	dTi	F9Q 730, F9Q 734	97 TO 99	M10X1.0	12
RENAULT	MODUS	1.5	dCi 65 / 80	K9K…	04 ON	M10X1.0	12
RENAULT	SAFRANE	2.5	TD		93 TO 96	M12X1.25	1
RENAULT	SCENIC (99 -03)	1.9	dTi	F9Q 730, 734	99 ON	M10X1.0	12
RENAULT	MODUS	1.9	dCi	F9Q 718, 731, 732, 736	00 ON	M10X1.0	12
RENAULT	MODUS	1.9	dTi	F9QT-770	01 ON	M10X1.0	12
RENAULT	SCENIC 2	1.5	dCi	K9K…	03 ON	M10X1.0	12
RENAULT	SCENIC 2	1.9	dCi	F9Q800, 808	03 ON	M10X1.0	12
RENAULT	TRAFIC	1.9		F8Q 600, F8Q 606	97 TO 00	M10X1.0	13
RENAULT	SCENIC 2	1.9	dCi	F9Q 760/770	01 ON	M10X1.0	12
RENAULT	SCENIC 2	2.1			81 TO 94	M12X1.25	1
RENAULT	SCENIC 2	2.1		JS 620, JS 758	94 TO 98	M12X1.25	1
RENAULT	SCENIC 2	2.5		S0FIM	90 TO 97	M12X1.25	1
RENAULT	SCENIC 2	2.5		S8U-758/780/782	97 ON	M12X1.25	1
RENAULT	VEL SATIS	2.2	dCi		03 ON	M10X1.0	20
ROVER	25	2.0	8 VALVE		99 ON	M10X1.0	12
ROVER	45	2.0	8 VALVE		99 ON	M10X1.0	12
ROVER	75	2.0	16 VALVE CDT	M47R (BMW)	99 ON	M10X1.0	12
ROVER	115	1.5	12 V	TUD 5	95 TO 98	M10X1.0	12
ROVER	218	1.8	Inc TURBO		91 TO 96	M12X1.25	1
ROVER	218	1.9	Inc TURBO		91 TO 96	M12X1.25	1
ROVER	418	1.8	Inc TURBO		91 TO 96	M12X1.25	1
ROVER	418	1.9	Inc TURBO		91 TO 96	M12X1.25	1
ROVER	825	2.5	UP TO VIN V230966	VM	91 TO 96	M12X1.25	1
ROVER	825	2.5	FROM VIN V230967	VM	96 TO 99	M10X1.0	13
ROVER	220	2.0		20T2R, 20T2N (Intercooled)	95 TO 99	M10X1.0	12
ROVER	420	2.0		20T2R, 20T2N (Intercooled)	95 TO 99	M10X1.0	12
ROVER	620	2.0		20T2R, 20T2N (Intercooled)	95 TO 99	M10X1.0	12
ROVER	2400	2.4	SDi		82 TO 86	M12X1.25	1
ROVER	MAESTRO	2.0	Incl. TURBO	PERKINS PRIMA	90 ON	M12X1.25	1
ROVER	METRO	1.4			92 TO 95	M12X1.25	1
ROVER	MONTEGO	2.0	Incl. TURBO		88 ON	M12X1.25	1
ROVER	STREETWISE	2.0	8 VALVE		03 ON	M10X1.0	12
SAAB	9-3 Mk1	2.2	TiD	X22DTH	98 TO 00	M10X1.0	16
SAAB	9-3 Mk3	1.9		8V Z19DT	04 ON	M10X1.0	15
SAAB	9-3 Mk5	2.2	125BHP, 175BHP	D223L	02 ON	M10X1.25	9
SAAB	9-6	2.2	TiD	D223L	02 ON	M10X1.0	16
SEAT	ALHAMBRA 1	1.9		1Z, AHU, AFN,ANU	96 ON	M10X1.0	12
SEAT	ALHAMBRA 2	1.9		AUY	00 ON	M10X1.0	12
SEAT	ALHAMBRA 2	1.9		ASZ	02 ON	M10X1.0	13
SEAT	AROSA	1.4		AMF	02 ON	M10X1.0	13
SEAT	ALHAMBRA 2	1.7	SDi	AKU	98 ON	M10X1.0	12
SEAT	CORDOBA	1.9	Incl. TURBO	1Y, AAZ	94 TO 96	M12X1.25	1
SEAT	ALHAMBRA 2	1.9	Tdi (Intercooler)	AFN	97 TO 99	M10X1.0	12
SEAT	ALHAMBRA 2	1.9	SDi	AGP, AQM	99 TO 02	M10X1.0	12
SEAT	ALHAMBRA 2	1.9	TDi	AGR,ALH,ALK,ASK,ASV	99 T002	M10X1.0	12
SEAT	ALHAMBRA 2	1.9	TDi	ATD, AXR, BLT	03 TO 06	M10X1.0	13

Applications

PEUGEOT	406	2.0	HDi	DW10TD, DW10TED	99 ON	M10X1.0	18
PEUGEOT	406	2.1	TURBO	XUD11 ATE	96 TO 98	M12X1.25	1
PEUGEOT	406	2.1		XUD11 BTE	98 TO 99	M12X1.25	1
PEUGEOT	406	2.2	HDi	DW12TED	00 TO 03	M10X1.0	18
PEUGEOT	407	1.6		DV6TED	04 TO 06	M8X1.0	21
PEUGEOT	504	2.3	PICK UP	XD2	84 ON	M12X1.25	1
PEUGEOT	505	2.5	TURBO/NON TURBO		82 ON	M12X1.25	1
PEUGEOT	604	2.5	TURBO/NON TURBO	152A XD3T	82 ON	M12X1.25	1
PEUGEOT	605	2.1	TURBO/NON TURBO	XUD11 ATE/L,BTE	90 TO 98	M12X1.25	1
PEUGEOT	605	2.1		XUD11 BTE	98 ON	M12X1.25	1
PEUGEOT	607	2.0	HDi 110	DW10TD	01 TO 05	M10X1.0	18
PEUGEOT	607	2.2		DW12TED	01 TO 05	M10X1.0	18
PEUGEOT	806	1.9	TURBO	XUD9TE	95 TO 98	M12X1.25	1
PEUGEOT	806	1.9		XUD9TE	98 ON	M12X1.25	1
PEUGEOT	806	2.0	HDi	DW10TED	99 ON	M10X1.0	18
PEUGEOT	807	2.0	HDi	DW10TED	02 ON	M10X1.0	18
PEUGEOT	807	2.2	HDi	DW12TED4	02 ON	M10X1.0	18
PEUGEOT	BOXER	1.9	NON TURBO	XUD9AU	94 TO 98	M12X1.25	1
PEUGEOT	BOXER	1.9	TURBO	XUD9TFU	94 TO 98	M12X1.25	1
PEUGEOT	BOXER	1.9		XUD9AU, XUD9TFU	98 ON	M12X1.25	1
PEUGEOT	BOXER	2.0	HDi	DW10TED, DW10DU	99 ON	M10X1.0	18
PEUGEOT	BOXER	2.2	HDi & HDi TD	DW12TED4	01 ON	M10X1.0	18
PEUGEOT	BOXER	2.5	NON TURBO	DJ5	94 ON	M12X1.25	1
PEUGEOT	BOXER	2.5	TDI	DJ5TED 12V	96 ON	M10X1.0	13
PEUGEOT	BOXER	2.5	TURBO	DJ5T	94 TO 96	M12X1.25	1
PEUGEOT	BOXER	2.8	HDi TD		00 ON	M10X1.0	15
PEUGEOT	EXPERT	1.9		XUD9A	96 TO 98	M12X1.25	1
PEUGEOT	EXPERT	1.9	TURBO	XUD 9TE	96 TO 98	M12X1.25	1
PEUGEOT	EXPERT	1.9		DW8	98 ON	M10X1.0	12
PEUGEOT	EXPERT	1.9		XUD 9A, XUD 9TF, XUD 9BTF	98 ON	M12X1.25	1
PEUGEOT	EXPERT	2.0	HDi	DW10	00 ON	M10X1.0	18
PEUGEOT	J5				82 ON	M12X1.25	1
PEUGEOT	J7				82 ON	M12X1.25	1
PEUGEOT	J9				82 ON	M12X1.25	1
PEUGEOT	PARTNER	1.8		XUD7	96 TO 98	M12X1.25	1
PEUGEOT	PARTNER	1.8		XUD7	98 ON	M12X1.25	1
PEUGEOT	PARTNER	1.9		DW8	98 ON	M10X1.0	12
PEUGEOT	PARTNER	1.9		XUD9A	96 TO 98	M12X1.25	1
PEUGEOT	PARTNER	1.9		XUD9A	98 ON	M12X1.25	1
PEUGEOT	PARTNER	2.0	HDi	DW10	00 ON	M10X1.0	18
PROTON	PERSONA	2.0	SDi		96 TO 97	M10X1.25	6
PROTON	PERSONA	2.0	TDi		97 TO 99	M10X1.25	6
PROTON	WIRA	2.0	TD		00 TO 04	M10X1.25	6
RENAULT	5	1.6			87 TO 92	M12X1.25	2
RENAULT	9	1.6			83 TO 89	M12X1.25	2
RENAULT	11	1.6			84 TO 89	M12X1.25	2
RENAULT	18	2.1			81 TO 86	M12X1.25	1
RENAULT	19	1.9	NON TURBO	F8Q	89 TO 91	M12X1.25	1
RENAULT	19	1.9	NON TURBO	F8Q	91 ON	M12X1.25	2
RENAULT	19	1.9	TURBO	F8Q TURBO	90 TO 96	M12X1.25	2
RENAULT	21	1.9	NON TURBO		89 TO 91	M12X1.25	1
RENAULT	21	1.9	NON TURBO	F8Q	91 ON	M12X1.25	2
RENAULT	21	2.1	NON TURBO		86 TO 95	M12X1.25	1
RENAULT	21	2.1	TURBO		86 ON	M12X1.25	1
RENAULT	25	2.1			84 TO 93	M12X1.25	1
RENAULT	AVANTIME	2.2	dCi		02 ON	M10X1.0	20
RENAULT	CLIO 1	1.9			90 TO 91	M12X1.25	1
RENAULT	CLIO 1	1.9		F8Q	91 TO 98	M12X1.25	2
RENAULT	CLIO 2	1.9		F8Q 630	98 ON	M10X1.0	13
RENAULT	CLIO 2	1.9		F8Q 632	99 ON	M10X1.0	12
RENAULT	CLIO 2 Phase 2	1.5		K9K 704	01 ON	M10X1.0	12
RENAULT	CLIO 3	1.5		K9K 764, 766, 768	05 ON	M10X1.0	12
RENAULT	ESPACE 1	2.1	TURBO	J8S	93 TO 97	M12X1.25	1
RENAULT	ESPACE 2 / GRAND ESPACE	2.2	TURBO	G8T 714/716	97 TO 00	M10X1.0	12
RENAULT	ESPACE 3 / GRAND ESPACE	2.2	dCi	G9T 710	00 ON	M10X1.0	20
RENAULT	ESPACE 4 / GRAND ESPACE	1.9	dCi	F9Q	02 ON	M10X1.0	12
RENAULT	ESPACE 4 / GRAND ESPACE	2.2	dCi	G9T 742/743	02 ON	M10X1.0	20
RENAULT	EXPRESS / EXTRA	1.6			86 ON	M12X1.25	2
RENAULT	EXPRESS / EXTRA	1.9			86 TO 91	M12X1.25	2
RENAULT	EXPRESS / EXTRA	1.9		F8Q 774, 776, 730	91 ON	M12X1.25	2
RENAULT	EXPRESS / EXTRA	1.9		F8Q 640, 644, 646, 648	94 ON	M12X1.25	1
RENAULT	EXPRESS / EXTRA	1.9	D 55, D 65	F8Q 662, F8Q 630	98 ON	M10X1.0	13
RENAULT	GRAND SCENIC	1.5		K9K	04 ON	M10X1.0	12
RENAULT	GRAND SCENIC	1.9		F9Q	04 ON	M10X1.0	12

Applications

MANUFACTURER	MODEL	SIZE	TYPE	ENG TYPE/CODE	DATE	PLUG SIZE	ADAPTOR
ALFA	147	1.9		8V JTD	03 ON	M10X1.0	15
ALFA	156	1.9		8V JTD	03 ON	M10X1.0	15
ALFA	156	1.9		16V JTD	03 TO 05	M10X1.0	15
ALFA	156	2.4		AR.32501	99 TO 00	M10X1.0	15
ALFA	156	2.4		839 A6.000	00 TO 03	M10X1.0	15
ALFA	156	2.4	150bhp	841 C.000	02 ON	M10X1.0	15
ALFA	MITO	1.3	JTDM	199A3.000	08 ON	M8X1.0	21
AUDI	80	1.6	TD	SB	86 TO 97	M12X1.25	1
AUDI	80	1.9	TD	AAZ	92 ON	M12X1.25	1
AUDI	80	1.9	TDi	1Z	92 ON	M10X1.0	12
AUDI	100	2.0	D.TD	NC	82 TO 91	M12X1.25	1
AUDI	100	2.5	TDi	1T	90 TO 91	M10X1.0	12
AUDI	A2	1.4		AMF, ANY, BHC	00 ON	M10X1.0	13
AUDI	A3	1.4		BAY	03N ON	M10X1.0	12
AUDI	A3	1.9		AGR,AHF,AJM,ALH,ANU,ASV	96 ON	M10X1.0	12
AUDI	A3	1.9		ASZ, ATD, AXR	00 TO 03	M10X1.0	12
AUDI	A3	1.9		ASZ, ATD, AXR	00 TO 03	M10X1.0	13
AUDI	A4	1.9		1Z,AFF,AFN,AHH	95 TO 04	M10X1.0	12
AUDI	A4	1.9		AHU,AJM,ATJ	95 TO 04	M10X1.0	12
AUDI	A4	1.9		AVB, AVF, AWX	01 TO 04	M10X1.0	12
AUDI	A4	1.9		AVB, AVF, AWX	01 TO 04	M10X1.0	13
AUDI	A4	2.5	V6 TDI	AFB,AKE,AKN,AYM	98 ON	M10X1.0	17
AUDI	A4	2.5	V6 TDI	BAU,BCZ,BDG,BDH,BFC	02 ON	M10X1.0	17
AUDI	A4	2.5	V6 TDI	BCZ, BDG	04 ON	M10X1.0	17
AUDI	A6	1.9		1Z,AFF,AFN,AHU,AVF,AVG	95 ON	M10X1.0	12
AUDI	A6	1.9		AJM,AVB,AWX	00 ON	M10X1.0	13
AUDI	A6	2.5		AAT, AEL	94 TO 97	M10X1.0	12
AUDI	A6	2.5	V6 TDI	AFB,AKE,AKN,AYM	97 ON	M10X1.0	17
AUDI	A6	2.5	V6 TDI	BAU,BCZ,BDG,BDH,BFC	02 ON	M10X1.0	17
AUDI	A8	4.0	V6 TDI	ASE	03 ON	M10X1.0	17
AUDI	ALL ROAD	2.5	V6 TDI	AFB,AKE,AKN,AYM,BAU,BCZ,BDG,BDH,BFC	04 TO 06	M10X1.0	17
BEDFORD	CF	2.3			84 TO 87	M12X1.25	1
BMW	118 E87	2.0		M47 N20 4D4 (122BHP)	04 ON	M10X1.25	4
BMW	120 E87	2.0		M47 N20 4D4 (163BHP)	04 ON	M10X1.25	4
BMW	318 E36	1.7	Tds	M41	95 ON	M12X1.25	1
BMW	318 E46	2.0		M47 N20 4D4 Euro 4	04 ON	M10X1.25	4
BMW	318 E90 / E91	2.0		M47 N20 4D4 Euro 4	05 ON	M10X1.25	4
BMW	320 E46	2.0		M47 D20 4D1	99 TO 01	M10X1.0	12
BMW	321 E46	2.0		M47 N20 4D4 Euro 4	01 ON	M10X1.25	4
BMW	320 E90 / E91	2.0		M47 N20 4D4 Euro 4	05 ON	M10X1.25	4
BMW	325 E36	2.5	Tds	M51 D25	93 ON	M12X1.25	1
BMW	325 E90 / E91	3.0		M57 N2 D30	06 ON	M10X1.25	4
BMW	330 E46	2.9		M57 D30 (2926cc)	99 ON	M10X1.0	12
BMW	331 E46	3.0		M57 N30 6D2 (2998cc)	03 ON	M10X1.25	4
BMW	330 E90 / E91	3.0		M57 N2 D30 (231bhp)	06 ON	M10X1.25	4
BMW	335 E90 / E91	3.0	TWIN TURBO	M57 N2 D30 (286bhp)	06 ON	M10X1.25	4
BMW	520 E60 / 61	2.0		M47 N204D4	05 TO 07	M10X1.25	4
BMW	525 E34	2.5	TD	M51 D25 (115bhp)	93 TO 96	M12X1.25	1
BMW	526 E34	2.5	td tds	M51 D25 (143bhp)	93 TO 97	M12X1.25	1
BMW	525 E39	2.5		M51 D25	97 TO 98	M12X1.25	1
BMW	526 E39	2.5		M57 D25 (163bhp)	00 ON	M10X1.0	12
BMW	525 E60 / E61	2.5		M57 N25 6D4 (177bhp)	04 ON	M10X1.25	4
BMW	530 E39	2.9		M57 D30 (184bhp)	98 ON	M10X1.0	12
BMW	530 E60 / E61	3.0		M57 N30 6D2	03 ON	M10X1.25	4
BMW	535 E60 / E61	3.0		M57 N30 6D4	04 ON	M10X1.25	4
BMW	730 E38	3.0		M57 D30	98 TO 01	M10X1.0	12
BMW	730 E65	3.0		M57 N30 6D2	03 ON	M10X1.25	4
BMW	X3 E83	2.0		M47 N20 4D4	04 ON	M10X1.25	4
BMW	X3 E83	3.0		M57 N30 6D4	05 ON	M10X1.25	4
BMW	X5 E53	3.0		M57 30 6D1	01 TO 02	M10X1.0	12
BMW	X5 E53	3.0		M57 N30 6D4	03 TO 06	M10X1.25	4
BMW	X5 E70	3.0		M57 N2 D30	07 ON	M10X1.25	4
CHRYSLER	GRAND VOYAGER	2.5		VM	98 TO 01	M10X1.0	13
CHRYSLER	VOYAGER	2.5	TD 115 BHP	VMKHR492/VM425	92 TO 95	M12X1.25	1
CHRYSLER	VOYAGER	2.5	TD LE 129 BHP	HR 425 CLI	92 TO 95	M12X1.25	1
CHRYSLER	VOYAGER	2.5		VM	95 TO 01	M10X1.0	13
CHRYSLER	PT CRUISER	2.2	CRD 2148cc	EDJ	02 ON	M10X1.0	19
CITROEN	AX	1.4		TUD 3L	89 TO 94	M12X1.25	1
CITROEN	AX	1.5		TUD 5	94 ON	M10X1.0	12
CITROEN	BERLINGO	1.8		A9A/XUD7	96 TO 98	M12X1.25	1
CITROEN	BERLINGO	1.8		XUD7	98 ON	M12X1.25	1
CITROEN	BERLINGO	1.9		DW8	98 ON	M10X1.0	12

Applications

CITROEN	BERLINGO	1.9		DJY/XUD9A	96 TO 98	M12X1.25	1
CITROEN	BERLINGO	1.9		XUD9A	98 ON	M12X1.25	1
CITROEN	BERLINGO	2.0	HDi	DW10	01 ON	M10X1.0	18
CITROEN	BX	1.8		XUD7	85 ON	M12X1.25	1
CITROEN	BX	1.9		XUD9	84 ON	M12X1.25	1
CITROEN	C2	1.4	Hdi	DV4TD	03 TO 04	M8X1.0	21
CITROEN	C3	1.4	Hdi	DV4TD	02 ON	M8X1.0	21
CITROEN	C4	1.6	HDi 90	DV6TED4	04 ON	M8X1.0	21
CITROEN	C4	1.6	HDi 110	DV6TED4	04 ON	M8X1.0	21
CITROEN	C4	2.0		DW10BTED4	04 ON	M10X1.0	18
CITROEN	C5	2.0	HDi 90/110	RHY (DW10TD), RHZ (DW10ATED)	01 TO 04	M10X1.0	18
CITROEN	C5	2.2	HDI 136	4HX (DW12TED4/FAP)	01 TO 04	M10X1.0	18
CITROEN	C8	2.0	HDi 110	DW10ATED4	02 TO 06	M10X1.0	18
CITROEN	C8	2.2		DW12TED	02 TO 03	M10X1.0	18
CITROEN	C15 VAN	1.8		XUD7	86 TO 98	M12X1.25	1
CITROEN	C15 VAN	1.8		XUD7	98 TO 01	M12X1.25	1
CITROEN	C15 VAN	1.9		DW8B	01 ON	M10X1.0	12
CITROEN	C25 VAN	1.9		D9B	87 ON	M12X1.25	1
CITROEN	C25 VAN	2.5		CRD93	87 ON	M12X1.25	1
CITROEN	CX	2.5			83 TO 91	M12X1.25	1
CITROEN	DISPATCH	1.9		XUD9A, XUD9TF	96 TO 98	M12X1.25	1
CITROEN	DISPATCH	1.9		XUD9A, XUD9TF	98 ON	M12X1.25	1
CITROEN	DISPATCH	1.9		DW8	98 ON	M10X1.0	12
CITROEN	DISPATCH	2.0	HDi	DW10	00 ON	M10X1.0	18
CITROEN	DISPATCH	2.0	HDi 16 V	DW10ATED	02 ON	M10X1.0	18
CITROEN	EVASION	1.9	TURBO	XUD9TF	94 TO 98	M12X1.25	1
CITROEN	EVASION	2.1	TURBO		96 TO 98	M12X1.25	1
CITROEN	RELAY	1.9		XUD9TF, 9AU	94 TO 98	M12X1.25	1
CITROEN	RELAY	1.9		XUD9TF	98 ON	M12X1.25	1
CITROEN	RELAY	2.0	HDi	DW10TED/DU	98 ON	M10X1.0	18
CITROEN	RELAY	2.2	Hdi	DW12TED	02 ON	M10X1.0	18
CITROEN	RELAY	2.5		DJ5, DJ5T	94 ON	M12X1.25	1
CITROEN	RELAY	2.5	TDI	DJ5TED 12V	96 ON	M10X1.0	13
CITROEN	RELAY	2.8	Hdi	8140.63	01 TO 02	M10X1.0	15
CITROEN	SAXO 1	1.5		VJZ (TUD 5/L3)	96 ON	M10X1.0	12
CITROEN	SAXO 2	1.5		TUD 5	99 ON	M10X1.0	12
CITROEN	SYNERGIE	1.9	TD	XUD9BTF/L3	95 TO 98	M12X1.25	1
CITROEN	SYNERGIE	1.9		XUD9TF, XUD9BTF	98 TO 00	M12X1.25	1
CITROEN	SYNERGIE	2.0	HDI	DW10TED	99 ON	M10X1.0	18
CITROEN	VISA 17 D	1.8		161A	85 TO 88	M12X1.25	1
CITROEN	XANTIA	1.9		DHW (XUD9SD/L3)	93 ON	M12X1.25	1
CITROEN	XANTIA	1.9		DHX (XUD9BTF/L3)	93 TO 98	M12X1.25	1
CITROEN	XANTIA	1.9		XUD9A, XUD9BTF, XUD9BSD	98 ON	M12X1.25	1
CITROEN	XANTIA	2.0	HDI	DW10TD, DW10TED	98 ON	M10X1.0	18
CITROEN	XANTIA	2.1	TURBO DIESEL	PBC (XUD11BTE/L3)	97 TO 98	M12X1.25	1
CITROEN	XANTIA	2.1	TURBO DIESEL	PBC (XUD11BTE/L3)	98 TO 00	M12X1.25	1
CITROEN	XM	2.1	TURBO	XUD11 ATE/L,BTE	90 TO 98	M12X1.25	1
CITROEN	XM	2.1	TURBO	XUD11BTE	98 ON	M12X1.25	1
CITROEN	XM	2.5	TURBO	THY (DK5 ATE/L3)	94 ON	M12X1.25	1
CITROEN	XSARA 1	1.9	NON TURBO	DJY (XUD9A/L/3)	97 TO 00	M12X1.25	1
CITROEN	XSARA 1	1.9	TURBO 90	DHX (XUD9TE)	97 TO 00	M12X1.25	1
CITROEN	XSARA 1	2.0	HDI	DW10	99 ON	M10X1.0	18
CITROEN	XSARA 2	1.4	Hdi	8HZ	02 TO 04	M8X1.0	21
CITROEN	XSARA 2	1.9	PLUG Ø 10mm	DW8	00 ON	M10X1.0	12
CITROEN	XSARA 2	2.0	HDI 90	DW10TED	00 ON	M10X1.0	18
CITROEN	XSARA 2	2.0	HDI 110	DW10ATED	01 ON	M10X1.0	18
CITROEN	XSARA PICASSO	1.6	Hdi	DV6TED4	04 ON	M8X1.0	21
CITROEN	XSARA PICASSO	2.0	HDI	DW10	00 ON	M10X1.0	18
CITROEN	ZX	1.9	(NON TURBO)	XUD9AL	92 ON	M12X1.25	1
CITROEN	ZX	1.9	TURBO	XUD9TL	93 ON	M12X1.25	1
DACIA	DUSTER	1.6	RENAULT ENGINE		92 TO 99	M12X1.25	1
DAEWOO	KORANDO	2.9			00 ON	M12X1.25	1
DAEWOO	MUSSO	2.9			00 ON	M12X1.25	1
DAIHATSU	CHARADE	1.0		CL 10	83 TO 87	M10X1.25	4
DAIHATSU	CHARADE	1.0		CL 10	87 ON	M10X1.25	4
DAIHATSU	FOURTRAK	2.8		DL40	TO 84	M10X1.25	4
DAIHATSU	FOURTRAK	2.8	NON TURBO	DL50	84 TO 93	M10X1.25	4
DAIHATSU	FOURTRAK	2.8	TURBO	DL51	89 TO 93	M10X1.25	4
DAIHATSU	FOURTRAK	2.8	TURBO INTERCOOLER	DL52	93 ON	M10X1.25	4
FIAT	500	1.3	JTD	169.A1.000	09 ON	M8X1.0	21
FIAT	BRANDO	1.9	TD	169.A0.000	92 TO 96	M12X1.25	1
FIAT	BRAVA	1.9	TD		96 TO 01	M12X1.25	1
FIAT	BRAVA	1.9	JTD	Eng No. UP TO 1716459	98 TO 00	M10X1.0	15
FIAT	BRAVA	1.9	JTD	Eng. No. FROM 1716450	99 ON	M10X1.0	15

Applications

NISSAN	INTERSTAR	2.5	dCi 115 PS		02 ON	M10X1.0	20
NISSAN	KUBISTAR	1.5	60,70,80 PS		03 ON	M10X1.0	12
NISSAN	MICRA K12	1.5	dCi	K9K	02 ON	M10X1.0	12
NISSAN	NAVARA	2.5	131bhp DI TURBO	TD25TI	02 ON	M10X1.25	6
NISSAN	NOTE	1.5		K9K	06 ON	M10X1.0	12
NISSAN	PATROL	3.3		SD33	82 TO 86	M10X1.25	5
NISSAN	PATROL	3.3		SD33T	85 TO 87	M10X1.25	5
NISSAN	PATROL	3.3		SD33	87 ON	M10X1.25	5
NISSAN	PATROL	3.3		SD33T	87 ON	M10X1.25	5
NISSAN	PATROL	3.3		SD33	80 TO 82	M10X1.25	7
NISSAN	PATROL	3.3		SD33	82 TO 86	M10X1.25	5
NISSAN	PATROL	3.3		SD33T	85 TO 87	M10X1.25	5
NISSAN	PATROL	4.2		TD42		M10X1.25	6
NISSAN	PICK UP D21	2.5		SD25	87 TO 98	M10X1.25	5
NISSAN	PICK UP D21	2.5	TURBO	TD25	87 TO 98	M10X1.25	6
NISSAN	PICK UP D21	2.7	TURBO	TD27	87 TO 98	M10X1.25	6
NISSAN	PICK UP D22	2.5	82bhp	TD25	98 TO 02	M10X1.25	6
NISSAN	PICK UP D22	2.5	102bhp DI TURBO	TD25TI	98 TO 02	M10X1.25	6
NISSAN	PICK UP D22	2.5	131bhp DI TURBO	TD25TI	02 ON	M10X1.25	6
NISSAN	PRIMASTAR	1.9	dCi 82 & 100 PS	F9Q	02 ON	M10X1.0	12
NISSAN	PRIMERA 1 P10	2.0		CD20	92 TO 96	M10X1.25	7
NISSAN	PRIMERA 2 P11	2.0	TD	CD20T	96 TO 02	M10X1.25	7
NISSAN	PRIMERA 3 P12	2.2	DI	YD22ET	02 ON	M10X1.0	20
NISSAN	SERENA	2.0		LD20DHC	93 TO 96	M10X1.25	6
NISSAN	SERENA	2.3		LD23	95 TO 00	M10X1.25	6
NISSAN	SUNNY	1.7	B13	CD17	86 TO 91	M10X1.25	6
NISSAN	SUNNY	1.7	N14	CD17	91 ON	M10X1.25	6
NISSAN	SUNNY	2.0	N14	CD20	92 TO 96	M10X1.25	7
NISSAN	TERRANO II	2.7	TD	T27T	93 TO 96	M10X1.25	6
NISSAN	TERRANO II	2.7	TDi	TD27TI	96 ON	M10X1.25	6
NISSAN	TERRANO III	2.7	TD	TD27Ti	02 ON	M10X1.25	6
NISSAN	TERRANO VAN	2.7	TD	TD27Ti	02 ON	M10X1.25	6
NISSAN	URVAN	2.3		TD23		M10X1.25	6
NISSAN	URVAN	2.3		SD23	84 TO 88	M10X1.25	5
NISSAN	URVAN	2.3		SD23	84 TO 87	M10X1.25	5
NISSAN	URVAN	2.7		TD27		M10X1.25	6
NISSAN	VANETTE	2.0		LD20	81 TI0 82	M12X1.25	2
NISSAN	VANETTE	2.0		LD20	82 TO 87	M10X1.25	11
NISSAN	VANETTE	2.0		LD20	87 ON	M10X1.25	6
NISSAN	VANETTE	2.3	CARGO	LD23	95 TO 98	M10X1.25	6
NISSAN	VANETTE	2.3	E	LD23	98 ON	M10X1.25	6
NISSAN	X TRAIL	2.2	Di 112	YD22ET	01 ON	M10X1.0	20
OPEL	ASCONA	1.6			83 ON	M12X1.25	1
OPEL	KADETT	1.6			83 ON	M12X1.25	1
OPEL	REKORD	2.3	TURBO		83 ON	M12X1.25	1
OPEL	VECTRA	1.7			83 ON	M12X1.25	1
PEUGEOT	106	1.4		TUD 3	92 ON	M12X1.25	1
PEUGEOT	106	1.5		TUD 5	94 TO 02	M10X1.0	12
PEUGEOT	106	1.5		VJX TUD 5	00 ON	M10X1.0	12
PEUGEOT	1007	1.4			05 ON	M8X1.0	21
PEUGEOT	205	1.8		XUD7, XUD7T	83 TO 98	M12X1.25	1
PEUGEOT	205	1.9		XUD9	T0 98	M12X1.25	1
PEUGEOT	206	1.4		DV4TD	02 ON	M8X1.0	21
PEUGEOT	206	1.6		DV6TED	04 ON	M8X1.0	21
PEUGEOT	206	1.9	NON TURBO	DW8B	98 ON	M10X1.0	12
PEUGEOT	206	2.0	HDi	DW10	99 ON	M10X1.0	18
PEUGEOT	305	1.9			82 ON	M12X1.25	1
PEUGEOT	306	1.9	NON TURBO	DW8	98 ON	M10X1.0	12
PEUGEOT	306	1.9		XUD7	98 ON	M12X1.25	1
PEUGEOT	306	1.9	XND, XRD, XTD	XUD9A/L	93 TO 98	M12X1.25	1
PEUGEOT	306	1.9	XND, XRD, XTD	XUD9A, XUD9BSD	98 ON	M12X1.25	1
PEUGEOT	306	1.9	XRDT, XTDT	XUD9TE	93 TO 98	M12X1.25	1
PEUGEOT	306	1.9	XRDT, XTDT	XUD9TE	98 ON	M12X1.25	1
PEUGEOT	306	2.0	HDi	DW10TD	99 ON	M10X1.0	18
PEUGEOT	307	1.4		DV4TD	01 ON	M8X1.0	21
PEUGEOT	307	1.6		DV6TED	04 ON	M8X1.0	21
PEUGEOT	307	2.0	HDi 90 & 110	DW10TD	01 TO 04	M10X1.0	18
PEUGEOT	309	1.8	TURBO	XUD7T	89 TO 93	M12X1.25	1
PEUGEOT	309	1.9		XUD9	87 TO 93	M12X1.25	1
PEUGEOT	405	1.8	TURBO	XUD7TE		M12X1.25	1
PEUGEOT	405	1.9	NON TURBO	XUD9A	88 ON	M12X1.25	1
PEUGEOT	405	1.9	TURBO	XUD9TE, XUD9TF	92 ON	M12X1.25	1
PEUGEOT	406	1.9	TURBO	XUD9TE, XUD9TF	96 TO 98	M12X1.25	1
PEUGEOT	406	1.9	INCLUDING TURBO	XUD9SD, XUD9BSD, XUD9BTF	98 ON	M12X1.25	1

Applications

MERCEDES-BENZ	E320 CDI	3.2	211 Series	OM 648.961	02 TO 04	M10X1.0	19
MERCEDES-BENZ	G300	3.0		OM 603.931	93 ON	M12X1.25	1
MERCEDES-BENZ	G WAGON	3.0			81 to 90	M12X1.25	1
MERCEDES-BENZ	G WAGON	3.0		OM 603.931	91 TO 93	M12X1.25	1
MERCEDES-BENZ	L407				81 to 89	M12X1.25	1
MERCEDES-BENZ	ML270	2.7			00 ON	M10X1.0	19
MERCEDES-BENZ	S320	3.2	220 Series	COM 648.960	99 ON	M10X1.0	19
MERCEDES-BENZ	SPRINTER 208 D	2.2		OM 611.987	95 ON	M10X1.0	19
MERCEDES-BENZ	SPRINTER 208 D	2.3		OM 601	95 ON	M12X1.25	1
MERCEDES-BENZ	SPRINTER 210 D	2.9		OM 602.980	97 TO 00	M12X1.25	2
MERCEDES-BENZ	SPRINTER 212 D	2.9		OM 602.980.12	95 ON	M12X1.25	1
MERCEDES-BENZ	SPRINTER 212 D	2.9		OM 602.980.12	96 ON	M12X1.25	2
MERCEDES-BENZ	SPRINTER 212 D	2.9		OM 602.980.10	95 ON	M12X1.25	1
MERCEDES-BENZ	SPRINTER 212 D	2.9		OM 602.980.10	95 ON	M12X1.25	2
MERCEDES-BENZ	SPRINTER 308 D	2.3		OM 601	95 ON	M12X1.25	1
MERCEDES-BENZ	SPRINTER 310 D	2.9		OM 602.980	97 TO 00	M12X1.25	2
MERCEDES-BENZ	SPRINTER 312 D	2.9		OM 602.980.12	95 ON	M12X1.25	1
MERCEDES-BENZ	SPRINTER 312 D	2.9		OM 602.980.12	95 ON	M12X1.25	2
MERCEDES-BENZ	SPRINTER 312 D	2.9		OM 602.980.10	95 ON	M12X1.25	1
MERCEDES-BENZ	SPRINTER 312 D	2.9		OM 602.980.10	96 ON	M12X1.25	2
MERCEDES-BENZ	SPRINTER 412 D	2.9		OM 602.980.12	95 ON	M12X1.25	1
MERCEDES-BENZ	SPRINTER 412 D	2.9		OM 602.980.12	95 ON	M12X1.25	2
MERCEDES-BENZ	SPRINTER 412 D	2.9		OM 602.980.10	95 ON	M12X1.25	1
MERCEDES-BENZ	SPRINTER 412 D	2.9		OM 602.980.10	95 ON	M12X1.25	2
MERCEDES-BENZ	SPRINTER CDI	2.2	208 / 308 / 408 / CDI		00 ON	M10X1.0	19
MERCEDES-BENZ	SPRINTER CDI	2.2	211 / 311 / 411 CDI		00 ON	M10X1.0	19
MERCEDES-BENZ	SPRINTER CDI	2.2	213 / 313 / 413 CDI		00 ON	M10X1.0	19
MERCEDES-BENZ	SPRINTER CDI	2.7	216 / 316 / 416 CDI		00 ON	M10X1.0	19
MERCEDES-BENZ	V220	2.2	CDi	OM 611.980	99 ON	M10X1.0	19
MERCEDES-BENZ	VANEO	1.7	CDi	OM 668	02 ON	M10X1.0	19
MERCEDES-BENZ	VIANO	2.2	CDi	OM 646.983	04 ON	M10X1.0	19
MERCEDES-BENZ	VITO 108 D	2.3		OM 601.942	96 TO 03	M12X1.25	1
MERCEDES-BENZ	VITO 108 CDI	2.2	CDi	OM 611 A	99 TO 03	M10X1.0	19
MERCEDES-BENZ	VITO 110 TD	2.3	TD	OM 601.970	99 TO 03	M12X1.25	1
MERCEDES-BENZ	VITO 110 CDI	2.2	CDi	OM 611.960	99 ON	M10X1.0	19
MERCEDES-BENZ	VITO 111 CDI	2.1	CDi	OM 646.982	99 TO 03	M10X1.0	19
MERCEDES-BENZ	VITO 112 CDI	2.2	CDi	OM 611.980	99 ON	M10X1.0	19
MERCEDES-BENZ	VITO 115 CDI	2.1	CDi	OM 646.982	03 ON	M10X1.0	19
MG	EXPRESS	2.0	8 VALVE TD	20T	03 ON	M10X1.0	12
MG	ZR	2.0	8 VALVE TD	20T	01 to 05	M10X1.0	12
MG	ZS	2.0	8 VALVE TD	20T	01 to 05	M10X1.0	12
MG	ZT/ZT-T	2.0	16 VALVE CDTi	M47R (BMW)	01 to 05	M10X1.0	12
MITSUBISHI	CARISMA	1.9		F8QT	97 TO 02	M12X1.25	2
MITSUBISHI	GALAXY I	1.9		F9QT	02 TO 04	M10X1.0	12
MITSUBISHI	CHALLENGER	2.5			98 ON	M10X1.25	6
MITSUBISHI	COLT Mk 2 -89	1.8			84 TO 88	M10X1.25	7
MITSUBISHI	L200 PICK UP	2.5		4D56	TO 93	M10X1.25	7
MITSUBISHI	L200 PICK UP	2.5		4D56	94 TO 98	M10X1.25	6
MITSUBISHI	L200 PICK UP	2.5		4D56	99 ON	M10X1.25	6
MITSUBISHI	L300 VAN	2.5		4D56	TO 92	M10X1.25	7
MITSUBISHI	L300 VAN	2.5		4D56	93 TO 96	M10X1.25	6
MITSUBISHI	L300 VAN	2.5		4D56	97 ON	M10X1.25	6
MITSUBISHI	SHOGUN	2.3		4D55	84 TO 86	M10X1.25	7
MITSUBISHI	SHOGUN	2.3		4D55	84 TO 86	M10X1.25	7
MITSUBISHI	SHOGUN	2.5		4D56	85 TO 90	M10X1.25	7
MITSUBISHI	SHOGUN	2.5		4D56	94 TO 95	M10X1.25	6
MITSUBISHI	SHOGUN	2.5		4D56	96 TO 00	M10X1.25	6
MITSUBISHI	SHOGUN	2.8		4M40T	94 to 00	M10X1.25	6
MITSUBISHI	SHOGUN SPORT	2.5			98 ON	M10X1.25	6
MITSUBISHI	SPACE STAR	1.9	DI-D	RENAULT	02 ON	M10X1.0	12
MITSUBISHI	SPACE WAGON	2.0	N38W	4D68	95 TO 96	M10X1.25	6
NISSAN	ALMERA 1	2.0		CD20	95 TO 99	M10X1.25	7
NISSAN	ALMERA 2	2.2		YD22DDT	02 ON	M10X1.0	20
NISSAN	ALMERA TINO	2.2		YD22DDT	00 ON	M10X1.0	20
NISSAN	BLUEBIRD	2.0		LD20, L20T	80 TO 81	M12X1.25	2
NISSAN	BLUEBIRD	2.0		LD20, L20T	82 TO 87	M10X1.25	11
NISSAN	BLUEBIRD	2.0		LD20	86 ON	M10X1.25	6
NISSAN	CABSTAR	2.3		LD23	00 TO 04	M10X1.25	6
NISSAN	CABSTAR	2.5		TD25	89 TO 92	M10X1.25	6
NISSAN	CABSTAR	2.7		TD27	00 TO 04	M10X1.25	6
NISSAN	CABSTAR	2.7	TURBO	TD27-T	93 TO 96	M10X1.25	6
NISSAN	CABSTAR	2.7	Di	TD27-Ti	02 TO 04	M10X1.25	6
NISSAN	INTERSTAR	1.9	dCi 82 PS	F9Q 772	02 ON	M10X1.0	12
NISSAN	INTERSTAR	2.2	dCi 90 PS	G9T 722	02 ON	M10X1.0	20

Applications

FIAT	BRAVO	1.9	TD		96 TO 01	M12X1.25	1
FIAT	BRAVO	1.9	JTD	UP TO Eng No. 1716459	99	M10X1.0	15
FIAT	BRAVO	1.9	JTD	Eng. No.	99 ON	M10X1.0	15
FIAT	DOBLO	1.3	JTD		04 ON	M8X1.0	21
FIAT	DOBLO	1.9	Non Turbo	223 A6.000	01 ON	M12X1.25	2
FIAT	DOBLO	1.9	JTD	182.B9.000	02 ON	M10X1.0	15
FIAT	DUCATO	1.9			94 ON	M12X1.25	1
FIAT	DUCATO	1.9		8144.21.220	86 TO 94	M12X1.25	1
FIAT	DUCATO	2.0		149 B1.000	87 ON	M12X1.25	1
FIAT	DUCATO	2.0		280 A1.000	90 TO 94	M12X1.25	1
FIAT	DUCATO	2.0	JTD	RHV DW10	02 ON	M10X1.0	18
FIAT	DUCATO	2.5		8144.67	86 TO 94	M12X1.25	1
FIAT	DUCATO	2.5			82 TO 94	M12X1.25	1
FIAT	DUCATO	2.5		8140.47.2200	94 ON	M12X1.25	1
FIAT	DUCATO	2.5	4X4	8144.21.220	89 TO 94	M12X1.25	1
FIAT	DUCATO	2.5		8140.47.2280	94 ON	M12X1.25	1
FIAT	DUCATO	2.5	18 Maxi		86 TO 94	M12X1.25	1
FIAT	DUCATO	2.8		F28D	98 ON	M10X1.0	15
FIAT	FIORINO	1.3				M12X1.25	1
FIAT	FIORINO	1.5			93 ON	M12X1.25	1
FIAT	FIORINO	1.7				M12X1.25	1
FIAT	IDEA	1.3	JTD	188 A9.000	04 ON	M8X1.0	21
FIAT	MAREA	1.9	TD	182 A7.000, 182 A8.000	96 ON	M12X1.25	1
FIAT	MAREA	1.9	JTD	Eng. No. UP TO 1713819	99	M10X1.0	15
FIAT	MAREA	1.9	JTD	Eng. No. FROM 1713820	99 ON	M10X1.0	15
FIAT	MAREA	2.4	TD	185 A2.000	97 ON	M12X1.25	1
FIAT	MAREA	2.4	JTD	Eng. No.UP TO 1713819	99	M10X1.0	15
FIAT	MAREA	2.4	JTD	Eng. No. FROM 1713820	99 ON	M10X1.0	15
FIAT	MULTIPLA	1.9	JTD	Eng. No. FROM 1692992	99 ON	M10X1.0	15
FIAT	PANDA	1.3	JTD	188 A9.000	04 ON	M8X1.0	21
FIAT	PUNTO 1	1.7	NON TURBO	176 B3.000	95 TO 99	M12X1.25	1
FIAT	PUNTO 1	1.7	TD70	176 A3.000, 176 A5.000	94 TO 96	M12X1.25	1
FIAT	PUNTO 1	1.7	TD60S	176 B7.000	96 TO 99	M12X1.25	1
FIAT	PUNTO 2	1.9	NON TURBO	188 A3.000	99 ON	M12X1.25	2
FIAT	PUNTO 2	1.9	JTD	188 A2.000, 188 A7.000	99 ON	M10X1.0	15
FIAT	PUNTO 3	1.3	MULTIJET	188 A9.000	03 ON	M8X1.0	21
FIAT	PUNTO 4	1.9	JTD	188 B2.000	03 ON	M10X1.0	15
FIAT	PUNTO (GRANDE)	1.3	TD	188 A9.000	06 ON	M8X1.0	21
FIAT	PUNTO (GRANDE)	1.9	TD		06 ON	M10X1.0	15
FIAT	REGATA	1.9	TURBO		86 TO 90	M12X1.25	1
FIAT	SCUDO	1.9	DIESEL/TURBO DIESEL	XUD9TF	96 TO 98	M12X1.25	1
FIAT	SCUDO	1.9	PLUG Ø 12mm	XUD9TF	98 ON	M12X1.25	1
FIAT	SCUDO	1.9	NON TURBO	DW8	98 ON	M10X1.0	12
FIAT	SCUDO	2.0	JTD	RHX	00 TO 06	M10X1.0	18
FIAT	STILO	1.9	Plug Ø 10mm	192A1.000, 192A3.000	01 TO 06	M10X1.0	15
FIAT	TEMPRA	1.9	NON TURBO	160 A7.000	90 TO 96	M12X1.25	1
FIAT	TEMPRA	1.9	TURBO	160 A6.000, 160 D 1.000	90 TO 96	M12X1.25	1
FIAT	TIPO	1.7			88 TO 99	M12X1.25	1
FIAT	TIPO	1.9	TURBO		88 TO 92	M12X1.25	1
FIAT	TIPO	1.9	TURBO		92 ON	M12X1.25	1
FIAT	ULYSSE	1.9	TURBO	XUD9TF/L (D8B)	95 TO 00	M12X1.25	1
FIAT	ULYSSE	2.0	JTD 110	RHZ	00 TO 05	M10X1.0	18
FIAT	ULYSSE	2.2	JTD	DW12ATED	03 TO 06	M10X1.0	18
FIAT	UNO	1.7			87 ON	M12X1.25	1
FORD	COURIER VAN	1.6		LTB	84 TO 89	M12X1.25	1
FORD	COURIER VAN	1.8		RTC /D/G	89 ON	M12X1.25	1
FORD	COURIER VAN	1.8		(ENDURA-DI,-DE) RTK, J, N, P, Q	96 TO 00	M12X1.25	1
FORD	COURIER VAN	1.8	TDdi	RTN, RTP, RTQ	00 ON	M10X1.0	13
FORD	ESCORT (Incl. VAN)	1.6		LTC	84 TO 89	M12X1.25	1
FORD	ESCORT (Incl. VAN)	1.8		(D & DT) RTA /B/E/F/H, RFD/K	89 ON	M12X1.25	1
FORD	ESCORT (Incl. VAN)	1.8		(ENDURA-DE TCI) RFS, RVA	96 ON	M12X1.25	1
FORD	FIESTA III & IV	1.6		LTB	84 TO 89	M12X1.25	1
FORD	FIESTA III & IV	1.8		RTC /D/G	89 ON	M12X1.25	1
FORD	FIESTA III & IV	1.8		(ENDURA-DI,-DE) RTK, J, N, P, Q	96 TO 00	M12X1.25	1
FORD	FIESTA III & IV	1.8	TDdi	RTN, RTP, RTQ	00 ON	M10X1.0	13
FORD	FIESTA V	1.4		F6JA, F6JB (DV4TD)	02 TO 05	M8X1.0	21
FORD	FIESTA V	1.6		HHJA, HHJB	05 ON	M8X1.0	21
FORD	FOCUS I	1.8	TDdi	BHDA/B, C9DA..C	98 ON	M10X1.0	13
FORD	FOCUS I	1.8	TDCi	FFDA, F9DA, F9DB	01 ON	M10X1.0	13
FORD	FOCUS II	1.6		G8BA, G8DA	03 ON	M8X1.0	21
FORD	FOCUS C-MAX	1.6		G8DA	03 ON	M8X1.0	21
FORD	FUSION	1.4			02 ON	M8X1.0	21
FORD	FUSION	1.6		HHJA, HHJB	04 ON	M8X1.0	21
FORD	GALAXY I	1.9	TURBO	1Z	95 TO 96	M10X1.0	12

Applications

FORD	GALAXY I	1.9	TURBO	1Z	96 TO 00	M10X1.0	13
FORD	GALAXY I	1.9	TURBO	AHU, AFN, AJM, ANU, ANF, AVG	95 TO 00	M10X1.0	13
FORD	GALAXY II	1.9	TURBO	ANU, AUY, ASZ, AZS1	00 ON	M10X1.0	13
FORD	GRANADA	2.5			81 TO 86	M12X1.25	1
FORD	GRANADA	2.5		SCB	86 TO 94	M12X1.25	1
FORD	MAVERICK	2.7	TURBO 100 PS	TD27	93 TO 96	M10X1.25	6
FORD	MAVERICK	2.7	TI-TURBO D 125 PS	TD27E	96 TO 98	M10X1.25	6
FORD	MONDEO I	1.8		RFM, RFN	93 TO 96	M12X1.25	1
FORD	MONDEO II	1.8		(ENDURA-DE TCI) RFN	96 TO 00	M12X1.25	1
FORD	MONDEO III	2.0	DURATORQ DI/TDCi 115	D5BA, D6BA	00 TO 07	M10X1.0	19
FORD	MONDEO III	2.0	DURATORQ TDCi 130	HJBA, HJBB, FMBA, N7BA	01 TO 07	M10X1.0	19
FORD	MONDEO III	2.2	DURATORQ TDCi 150/155	QJBA, QJBB, QJBC, QJBD	04 ON	M10X1.0	19
FORD	ORION	1.6			84 TO 89	M12X1.25	1
FORD	ORION	1.8			88 TO 93	M12X1.25	1
FORD	P100	1.8	TURBO DIESEL		89 ON	M12X1.25	1
FORD	P101	2.3			82 ON	M12X1.25	1
FORD	RANGER	2.5		WL, WLT	99 TO 02	M10X1.25	6
FORD	SCORPIO	2.5	VM 115 & 125	SCB, SCC, SCD	94 TO 98	M10X1.0	13
FORD	S-MAX	2.0	TDCi 130	AZWA	07 ON	M10X1.0	19
FORD	SIERRA	1.8	TURBO DIESEL		89 TO 93	M12X1.25	1
FORD	SIERRA	2.3			82 TO 90	M12X1.25	1
FORD	TOURNEO	2.0	DI & TDCI	D3FA, F3FA, ABFA, FIFA	00 ON	M10X1.0	19
FORD	TOURNEO CONNECT	1.8	TDCi	FFDA, F9DA, F9DB	01 ON	M10X1.0	13
FORD	TRANSIT	2.0	DI & TDCI	D3FA, F3FA, ABFA, FIFA	00 ON	M10X1.0	19
FORD	TRANSIT	2.4			83 TO 85	M12X1.25	1
FORD	TRANSIT	2.4	DI & TDCI	F4FA, D2FA, D4FA, DOFA	00 ON	M10X1.0	19
FORD	TRANSIT CONNECT	1.8	TDdi 75 ENDURA DI	BHPA	02 ON	M10X1.0	13
FORD	TRANSIT CONNECT	1.8	TDCi 8V 90 DURATORQ	HCPA	02 ON	M10X1.0	13
HONDA	ACCORD	2.0		20T2R, 20T2N	96 TO 98	M10X1.0	12
HONDA	CIVIC	2.0		20T2R, 20T2N	97 ON	M10X1.0	12
HONDA	ACCENT	1.5	TD/CRTD	D3EA	02 ON	M10X1.0	12 OR 13
HONDA	ELANTRA	2.0	CRDi	D4EA	02 TO 07	M10X1.0	12 OR 13
HONDA	GETZ	1.5	CRTD	D3EA	03 ON	M10X1.0	12 OR 13
HONDA	H100	2.5		4D55 D4BA	TO 96	M10X1.25	7
HONDA	H101	2.5		4D56 D4BF	97 ON	M10X1.25	6
HYUNDAI	MATRIX	1.5	CRTD	D3EA	01 ON	M10X1.0	12 OR 13
HYUNDAI	SANTA FE	2.0	CRDi	D4EA	01 TO 06	M10X1.0	12 OR 13
HYUNDAI	SANTA FE	2.2	CRDi	D4EB	06 TO 08	M10X1.0	12 OR 13
HYUNDAI	TERRACAN	2.9			03 ON	M10X1.25	6
HYUNDAI	TRAJET	2.0	CRTD	D4EA	01 ON	M10X1.0	12 OR 13
HYUNDAI	TUCSON	2.0	CRTD	D4EA	04 ON	M10X1.0	12 OR 13
ISUZU	TROOPER	3.1	TD	4JG2	92 TO 98	M10X1.25	6
IVECO	DAILY	2.5	Mk1 35	Sofim 8140.61	78 TO 90	M12X1.25	1
IVECO	DAILY	2.8	Mk2 29/35	Sofim 8140.63	99 ON	M10X1.0	15
JAGUAR	X-TYPE	2.0		FMBA/B	03 ON	M10X1.0	19
JEEP	CHEROKEE	2.5	TD 129 BHP	VM	92 TO 95	M12X1.25	1
JEEP	CHEROKEE	2.5	115	VM	95 TO 99	M10X1.0	13
JEEP	COMMANDER	3.0	V6 CRD		06 ON	M10X1.0	19
JEEP	GRAND CHEROKEE	2.5	115	VM	97 TO 99	M10X1.0	13
JEEP	GRAND CHEROKEE	2.7	CRD	CDI Mercedes	01 ON	M10X1.0	19
JEEP	GRAND CHEROKEE	3.1		EXA	98 ON	M10X1.0	13
KIA	CARENS	2.0	CRDi	D4EA	02 ON	M10X1.0	12 OR 13
KIA	CEE'D	2.0	CRDi	D4EA-F	08 ON	M10X1.0	16
KIA	CERATO	2.0	CRDi	D4EA	04 ON	M10X1.0	12 OR 13
KIA	MAGENTIS	2.0	CRDi	D4EA	06 ON	M10X1.0	12 OR 13
KIA	SORENTO	2.5	CRDi	D4CB	03 ON	M10X1.25	10
KIA	SPORTAGE	2.0	CRDi	D4EA	04 ON	M10X1.0	12 OR 13
LAND ROVER	90	2.5			83 ON	M12X1.25	1
LAND ROVER	110	2.5			83 ON	M12X1.25	1
LAND ROVER	DEFENDER	2.5		200 TDi / 300 TDi GEMINI	89 TO 98	M10X1.0	16
LAND ROVER	DISCOVERY	2.5		200 TDi / 300 TDi GEMINI	89 TO 98	M10X1.0	16
LAND ROVER	FREELANDER 1	2.0	TURBO	20 T2R	97 TO 00	M10X1.0	12
LAND ROVER	FREELANDER 2	2.0	Td4	M47R (BMW)	00 ON	M10X1.0	12
LAND ROVER	RANGE ROVER 1	2.4	TURBO 90bhp	VM UNIT	86 TO 89	M12X1.25	1
LAND ROVER	DISCOVERY	2.5	Tdi	200/300 TDI GEMINI	89 ON	M10X1.0	16
LAND ROVER	RANGE ROVER 2	2.5	DSE	M51 D25 (BMW)	94 ON	M12X1.25	1
LAND ROVER	RANGE ROVER 3	3.0	Td6	M57 D30 (BMW)	02 ON	M10X1.0	12
LDV	200 Series	1.9			94 TO 96	M12X1.25	1
LDV	201 Series	2.0	Di	BA50217	89 TO 94	M12X1.25	1
LDV	400 Series	2.5	D	PERKINS	89 TO 96	M12X1.25	1
LDV	401 Series	2.5	D	EN55 PEUGEOT	89 TO 96	M12X1.25	1
LDV	402 Series	2.5	TD	ET70 PEUGEOT	89 TO 96	M12X1.25	1
LDV	CONVOY	2.4	DI 75/90/125 FORD DURATORQ	F4FA, D3FA, D4FA	01 ON	M10X1.0	19
LDV	CONVOY	2.5	D	EN55 PEUGEOT	96 ON	M12X1.25	1

Applications

LDV	CONVOY	2.5	TD	ET70 PEUGEOT	96 ON	M12X1.25	1
LDV	CUB	2.3		LD23	98 TO 02	M10X1.25	6
LDV	PILOT	1.9		PEUGEOT XUD9A/L3	96 TO 02	M12X1.25	1
LDV	PILOT	1.9		DW8B/L4	01 ON	M10X1.0	12
LDV	SHERPA	1.8			74 TO 86	M12X1.25	1
LDV	SHERPA	2.0		PERKINS PRIMA	86 TO 88	M12X1.25	1
LDV	SHERPA	2.5			86 TO 89	M12X1.25	1
LDV	SHERPA	2.5		PEUGEOT ENGINE	89 ON	M12X1.25	1
MAZDA	121	1.8		RTJ (ENDURA)	96 TO 97	M12X1.25	1
MAZDA	2	1.4	MZ-CD	F6JA	02 TO 07	M8X1.0	21
MAZDA		1.4	D-TS	F6JA	08 ON	M8X1.0	21
MAZDA	3	1.6			03 ON	M8X1.0	21
MAZDA	323	2.0		RF	99 ON	M10X1.25	6
MAZDA	5	2.0	110 & 143	RF	05 ON	M10X1.25	6
MAZDA	6	2.0		RF	02 ON	M10X1.25	6
MAZDA	626	2.0		RF-CX	94 TO 95	M10X1.25	6
MAZDA	626	2.0		RF	98 TO 03	M10X1.25	6
MAZDA	B2200	2.2		R2	TO 96	M10X1.25	6
MAZDA	B2500 PICK UP	2.5		WL,WLT	98 TO 03	M10X1.25	6
MAZDA	E2200	2.2	UP TO CHASSIS 805981	F2, R2	84 TO 96	M10X1.25	6
MAZDA	E2200	2.2	FROM CHASSIS Vin 805982	R2	96 ON	M10X1.25	6
MAZDA	MPV	2.0		RF	02 ON	M10X1.25	6
MAZDA	PREMACY	2.0		RF	99 ON	M10X1.25	6
MERCEDES-BENZ	190	2.0		OM 601	83 TO 89	M12X1.25	1
MERCEDES-BENZ	190	2.0		OM 601	89 TO 93	M12X1.25	1
MERCEDES-BENZ	190	2.5		OM 602	85 TO 89	M12X1.25	1
MERCEDES-BENZ	190	2.5		OM 602	89 TO 93	M12X1.25	1
MERCEDES-BENZ	190	2.5	DT	OM 602.961	89 TO 93	M12X1.25	1
MERCEDES-BENZ	200	2.0			80 ON	M12X1.25	1
MERCEDES-BENZ	200	2.0	TURBO		80 ON	M12X1.25	1
MERCEDES-BENZ	207	2.4			82 TO 89	M12X1.25	1
MERCEDES-BENZ	208	2.3		OM 601	88 ON	M12X1.25	1
MERCEDES-BENZ	209	3.0			82 TO 89	M12X1.25	1
MERCEDES-BENZ	210	2.9		OM 602	88 ON	M12X1.25	1
MERCEDES-BENZ	220	2.0			80 TO 85	M12X1.25	1
MERCEDES-BENZ	240	2.4			80 TO 89	M12X1.25	1
MERCEDES-BENZ	250	2.5		OM 612.912, 962	85 TO 89	M12X1.25	1
MERCEDES-BENZ	250	2.5		OM 612.912, 962	89 TO 93	M12X1.25	1
MERCEDES-BENZ	300	3.0		OM 603.912, 913, 960, 963	85 TO 89	M12X1.25	1
MERCEDES-BENZ	300	3.0		OM 603.912, 913, 960, 963	89 TO 93	M12X1.25	1
MERCEDES-BENZ	307	2.4			82 TO 89	M12X1.25	1
MERCEDES-BENZ	308	2.3		OM 601	88 TO 95	M12X1.25	1
MERCEDES-BENZ	309	3.0			82 TO 89	M12X1.25	1
MERCEDES-BENZ	310	2.9			82 TO 89	M12X1.25	1
MERCEDES-BENZ	310	2.9		OM 602	88 TO 95	M12X1.25	1
MERCEDES-BENZ	407	2.4			81 TO 89	M12X1.25	1
MERCEDES-BENZ	408	2.3		OM 601	88 TO 95	M12X1.25	1
MERCEDES-BENZ	409	3.0			82 TO 89	M12X1.25	1
MERCEDES-BENZ	410	2.9		OM 602	90 TO 95	M12X1.25	1
MERCEDES-BENZ	508	2.3		OM 601	89 TO 95	M12X1.25	1
MERCEDES-BENZ	A160 CDI	1.7	168 Series	OM 668.940, OM 668.941	98 TO 05	M10X1.0	16 OR 19
MERCEDES-BENZ	A160 CDI	1.7	169 Series	OM 668.942	01 TO 06	M10X1.0	16 OR 19
MERCEDES-BENZ	A170 CDI	1.7	168 Series	OM 668.940, OM 668.942	98 TO 05	M10X1.0	16 OR 19
MERCEDES-BENZ	C200 CDI	2.1	203 Series	OM 646.962	03 ON	M10X1.0	19
MERCEDES-BENZ	C220D	2.2		OM 604.910	93 TO 98	M12X1.25	3
MERCEDES-BENZ	C220D	2.2		OM 611.913, 915	96 ON	M12X1.25	3
MERCEDES-BENZ	C220 CDI	2.2	202 Series	OM 611.960, 961, 962	99 ON	M10X1.0	19
MERCEDES-BENZ	C220 CDI	2.2	203 Series	OM 611.962, OM 646.963	02 ON	M10X1.0	19
MERCEDES-BENZ	C250D	2.5		OM 605.910	93 TO 98	M12X1.25	3
MERCEDES-BENZ	C250TD	2.5		OM 605.960	96 TO 99	M12X1.25	3
MERCEDES-BENZ	C270 CDI	2.7	203 Series	OM 612.962	01 ON	M10X1.0	19
MERCEDES-BENZ	CLK270 CDI	2.7	209 Series	OM 612.962, OM612.967	02 ON	M10X1.0	19
MERCEDES-BENZ	E220 CDI	2.2		OM 604.912	96 TO 99	M12X1.25	3
MERCEDES-BENZ	E220 CDI	2.1	210 Series	OM 611.961	99 TO 02	M10X1.0	19
MERCEDES-BENZ	E220 CDI	2.1	211 Series 150bhp	OM 646.961	02 TO 06	M10X1.0	19
MERCEDES-BENZ	E250	2.5		OM 605.912,962	93 TO 95	M12X1.25	1
MERCEDES-BENZ	E251	2.5		OM 605.911	93 TO 95	M12X1.25	3
MERCEDES-BENZ	E253	2.5		OM 605.911	93 ON	M12X1.25	3
MERCEDES-BENZ	E270 CDI	2.7	211 Series	OM 646.961	02 ON	M10X1.0	19
MERCEDES-BENZ	E280 CDI	3.2	211 Series	OM 648.961	05 TO 06	M10X1.0	19
MERCEDES-BENZ	E300D	3.0		OM 606.910	93 TO 95	M12X1.25	3
MERCEDES-BENZ	E300TD	3.0		OM 603.960	93 TO 95	M12X1.25	1
MERCEDES-BENZ	E300TD	3.0		OM 606.910,912,962	93 ON	M12X1.25	3
MERCEDES-BENZ	E320 CDI	3.2	210 Series	OM 613.961	99 TO 02	M10X1.0	19